New Jersey Semi-Conductor Products, Inc.

20 STERN AVE.
SPRINGFIELD, NEW JERSEY 07081
U.S.A.

TELEPHONE: (201) 376-2922
(212) 227-6005
FAX: (201) 376-8960

Part Number: 2N5154
Description: BJTs, Si NPN Power, I(C) = 1 A to 2.4 A
Manufacturer..... many
Mil/High-Rel? (Y/N).....
Ic Max. (A)..... 2.0
Vbr CEO..... 80
Vbr CBO..... 100
Max. PD (W)..... 1.0
Derate Above 25xC..... 60m
Min hFE..... 70
Max. hFE..... 200
@Ic (test) (A)..... 2.5
@VCE (V)..... 5.0
Trans. Freq (Hz) Min..... 70M
Icbo Max. @Vcb Max. (A)..... 1.0mw
R(sat) (j).....
Tr Max. (s).....
t(f) Max. (S).....
Oper. Temp (xC) Max..... 175u
Pkg Style.....TO-39
Surface Mounted (Y/N)..... N
Pinout Equivalence Number..... 3-12

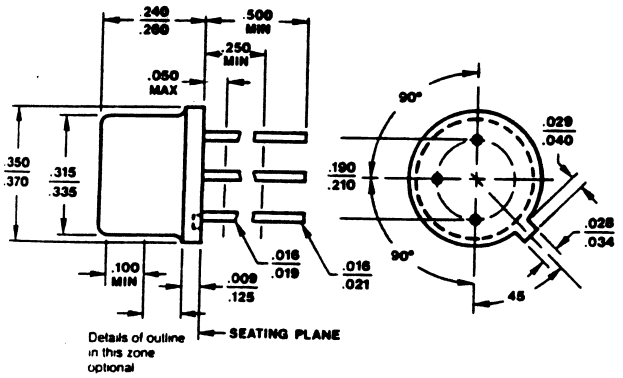

dim. in in.

Quality Semi-Conductors