UNCONTROLLED DOCUMENT

PART NUMBER	REV.
SSI-LXR4815SRD3316	B

REV.	E.C.N. NUMBER AND REVISION COMMENTS	DATE
A	E.C.N. #10674.	10.30.00
B	E.C.N. #10BRDR. & REDRAWN IN 3D.	1.10.02

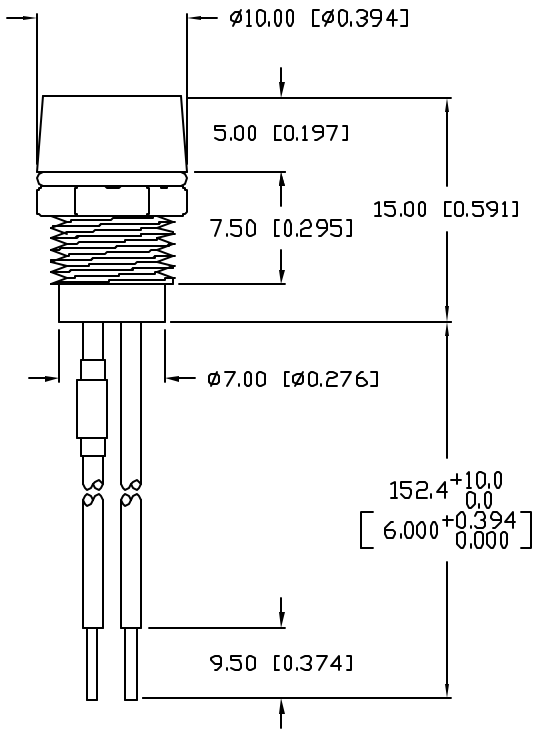

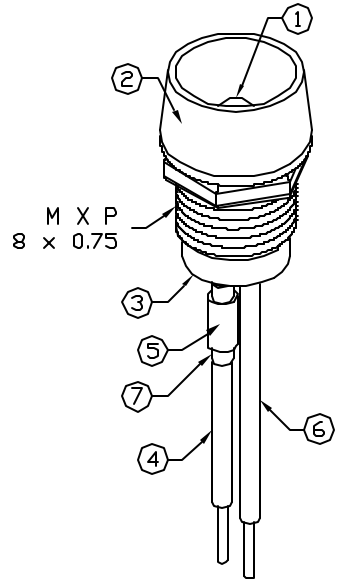

ELECTRO-OPTICAL CHARACTERISTICS T_A=25°C V_f=24V

PARAMETER	MIN	TYP	MAX	UNITS	TEST COND
PEAK WAVELENGTH		660		nm	
FORWARD VOLTAGE		24.0		V_f	
REVERSE VOLTAGE	5.0			V_r	I_r=100µA
AXIAL INTENSITY		100		mcd	V_f=24V
VIEWING ANGLE		60		2x theta	
EMITTED COLOR:	RED				
EPOXY LENS FINISH:	RED DIFFUSED				

LIMITS OF SAFE OPERATION AT 25°C

PARAMETER	MAX	UNITS
PEAK FORWARD VOLTAGE	24	V
STEADY CURRENT	13	mA
POWER DISSIPATION	300	mW
DERATE FROM 25°C	-1.2	mW/°C
OPERATING, STORAGE TEMP.	-40 TO +85	°C

NOTES:

A
1. SSL-LX5063SRD, RED LED. TRIM LEADS TO 5mm.
2. SSI-LXR4815, CHROME HOUSING.
3. SSH-LXH4815BSG, BLACK NYLON BUSHING. (NOT SEEN)
4. ANODE LEAD: LXP-WST24RDTOC, RED INSULATION, 2 PIECES:
   1-45mm LONG, STRIP 4mm, BOTH ENDS.
   2-100mm LONG, STRIP 4mm & 9.5mm.
5. LXP-RES 2200, 1/2 WATT.
6. CATHODE LEAD: LXP-WST24BLTOC, BLACK INSULATION, 160mm LONG, STRIP 2mm & 9.5mm.
7. LXP-HEATSHRINK-4, HEATSHRINK.

PANEL CUTOUT

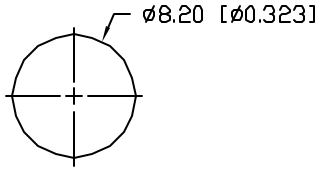

UNCONTROLLED DOCUMENT

*UNLESS OTHERWISE SPECIFIED TOLERANCES PER DECIMAL PRECISION ARE: X=±1 (±0.039), X.X=±0.5 (±0.020), X.XX=±0.25 (±0.010), X.XXX=±0.127 (±0.005). LEAD SIZE=±0.05 (±0.002), LEAD LENGTH=±0.75 (±0.030). MIN= +DECIMAL PRECISION -0.00 MAX.= +0.00 -DECIMAL PRECISION

REV.	PART NUMBER
B	SSI-LXR4815SRD3316

T-5mm 660nm SUPER RED PANEL INDICATOR LED, RED DIFFUSED LENS, WITH 6" WIRE LEADS, 24 VOLTS.

CONFIDENTIAL INFORMATION
THE INFORMATION CONTAINED IN THIS DOCUMENT IS THE PROPERTY OF LUMEX INC. EXCEPT AS SPECIFICALLY AUTHORIZED IN WRITING BY LUMEX INC., THE HOLDER OF THIS DOCUMENT SHALL KEEP ALL INFORMATION CONTAINED HEREIN CONFIDENTIAL AND SHALL PROTECT SAME IN WHOLE OR IN PART FROM DISCLOSURE AND DISSEMINATION TO ALL THIRD PARTIES.

RELIABILITY NOTE
OUR MANY YEARS OF EXPERIENCE DATA ACCUMULATION INDICATE THAT SOLDER HEAT IS A MAJOR CAUSE OF EARLY AND FUTURE FAILURE. PLEASE PAY ATTENTION TO YOUR SOLDERING PROCESS.

LUMEX
290 E. HELEN ROAD
PALATINE, IL 60067-6976
PHONE: +1.847.359.2790
US WEB: www.lumex.com
TW WEB: www.lumex.com.tw

B

DRAWN BY:	CHECKED BY:	APPROVED BY:	DATE: 6.4.98
BC			PAGE: 1 OF 1
			SCALE: N/A