DRAWING MADE IN THIRD ANGLE PROJECTION

THIS DRAWING IS UNPUBLISHED. RELEASED FOR PUBLICATION ,19 .
© COPYRIGHT 19 BY AMP INCORPORATED. ALL INTERNATIONAL RIGHTS RESERVED.

LOC	DIST
AD	25

P	F	ZONE	LTR	DESCRIPTION	DATE	APPD
			G	EC 0010-0350-95	3/20/95	LSB
			H	REVISED PER 0503-0580-97	9-30-97	JG
			J	REV PER EC 0U1B-0036-00	16 MAR 00	CR
			K	REV PER EC 0U1B-0367-00	04 JAN 01	CR

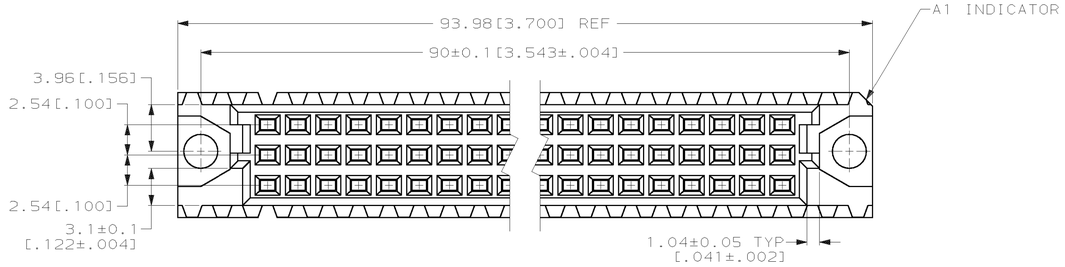

1. HOUSING MATERIAL: GLASS-FILLED POLYESTER. COLOR: GRAY.
2. CONTACT MATERIAL: PHOSPHOR BRONZE.
3. CONTACT FINISH: 0.00076[.000030] GOLD IN CONTACT AREA. 0.00127[.000050] NICKEL UNDERPLATE ALL OVER. TIN-LEAD ON POSTS.
4. PART NUMBER, DATE CODE IDENTIFICATION, CSA LOGO IN THIS APPROXIMATE AREA.
5. POINT OF MEASUREMENT FOR GOLD.
6. ACTION PIN POSTS REQUIRE 1.57[.062] MINIMUM THICK PC BOARD. RECOMMENDED PC BOARD HOLES ARE ø1.151±0.2[.0453±.001] DRILLED HOLE WITH 0.2-0.07[.001-.003] COPPER AND 0.008[.0003] MINIMUM TIN-LEAD PLATING. FINISHED HOLE AFTER PLATING, ø0.94-1.09[.037-.043].
7. CONTACT FINISH: 0.00127[.000050] GOLD IN CONTACT AREA. 0.00127[.000050] NICKEL UNDERPLATE ALL OVER. TIN-LEAD ON POSTS.
8. CONTACT FINISH: DIN 41612 CLASS 3 IN CONTACT AREA. TIN-LEAD ON POSTS.
9. CONTACT FINISH: DIN 41612 CLASS 2 IN CONTACT AREA. ALL OVER 1.27µm [.000050] MIN NICKEL. TIN-LEAD ON POSTS.

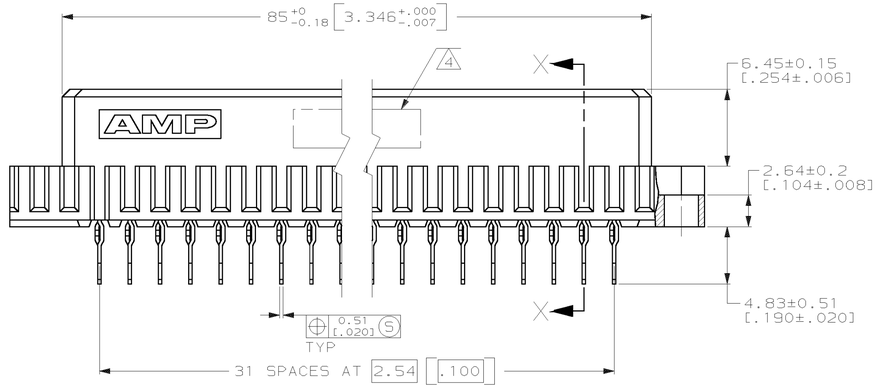

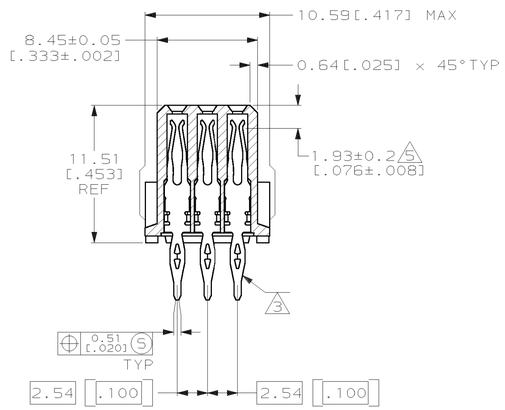

SECTION X-X

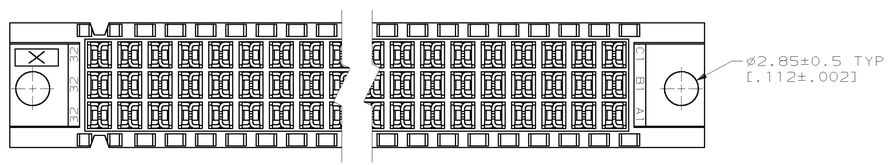

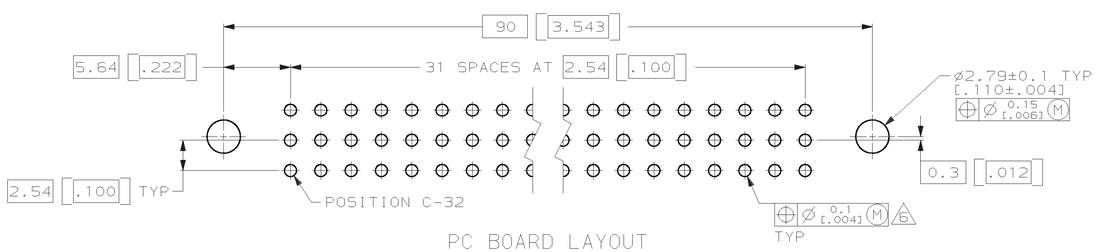

PC BOARD LAYOUT

8	1 THRU 32	X	X	X	96	535032-9
9	1 THRU 32	X	X	X	96	535032-5
3	1 THRU 32	X	X	X	96	535032-4
OBSOLETE 7	1 THRU 32	X	X	X	96	535032-1
NOTES	POSITIONS LOADED	ROWS LOADED C	B	A	NO. OF LOADED POSITION	ASSY PART NUMBER

DO NOT SCALE PRINT.
UNLESS SPECIFIED
DIMENSIONS IN mm [INCHES].
TOLERANCES ON :
2 PLC DEC ± 0.13[.005]
3 PLC DEC ± -
ANGLES ± -

MATERIAL
HOUSING: 1
CONTACT: 2

FINISH
CONTACT: 3 7 8 9

DR L. BRINER 12/6/88
CHK J. BROWN 2/27/89
APPD J. BROWN 2/27/89
APPD J. BROWN 2/27/89

PRODUCT SPEC -

APPLICATION SPEC -

WEIGHT -

AMP INCORPORATED
Harrisburg, Pa. 17105

NAME
ASSEMBLY, RECEPTACLE,
EUROCARD, TOOLLESS PRESSFIT,
96 POSITION

SIZE	FSCM NO	DRAWING NO
D	00779	535032
SCALE 4:1		SHEET 1 OF 1

CUSTOMER DRAWING

AMP 1756-3 REV 3-87

04-JAN-01 08:54:08 amp40973 /home/amp40973/edmmod