1. Dimensions:

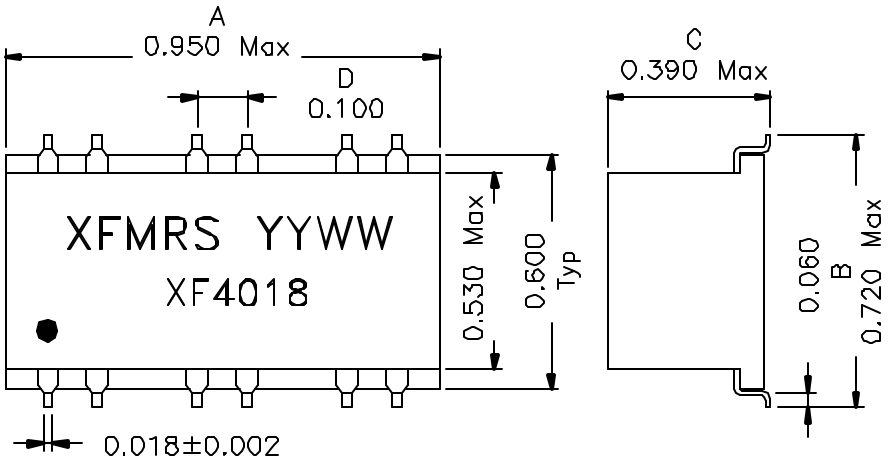

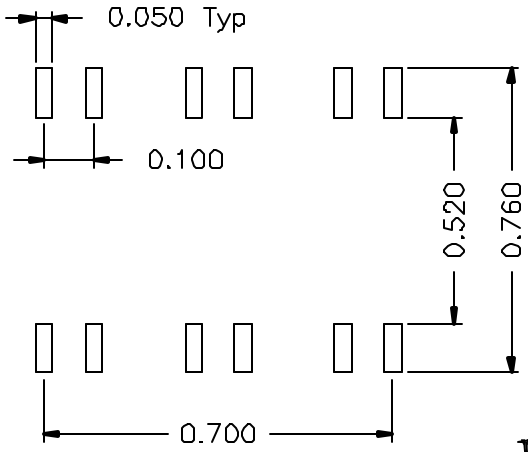

SUGGESTED PCB LAYOUT

2. Schematic:

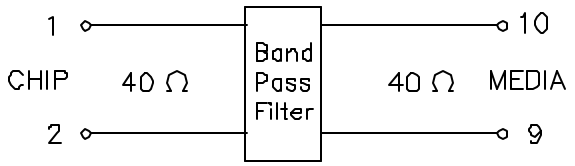

3. Electrical Specifications: @25°C

Passband: @4.5MHz–7.9MHz
Insertion Loss: 0.8dB Max @4.5MHz–7.9MHz
Return Loss: 10dB Min @4.5MHz–7.9MHz
Stopband: 900KHz–3MHz
Attenuation: 10dB Min

Note.

1. Solderability: Leads shall meet MIL–STD–202, Method 208D for solderability.
2. Flammability. UL94V–0,
3. ASTM oxygen index: > 28% ,
4. Temperature rating: 155°C. UL file E151556,
5. Operating Temperature Range: –40°C to +85°C

PRELIMINARY

DOC. REV: A/1

XFMRS INC.	Title: BANDPASS FILTER		
UNLESS OTHERWISE SPECIFIED TOLERANCES: .xxx ±0.010 Dimensions in Inch	P/N: XF4018		REV. A
	DWN.	廣玉坤	Jan–04–01
	CHK.	李清儿	Jan–04–01
SHT 1 OF 2	APP.	Joe Huff	Jan–04–01

THIS DOCUMENT IS STRICTLY NOT ALLOWED TO BE DUPLICATED WITHOUT AUTHORIZATION