12 String White LED Driver With Boost Controller

DESCRIPTION

The EUP2589 is a high power and high efficiency boost controller with 12-channel current sinker which is ideal for large LCD backlighting applications.

EUP2589 uses current mode, fixed frequency architecture which can clamp the inductor peak current each cycle. The switching frequency is programmable by an external frequency setting resistor. It drives an external MOSFET to boost up the output voltage from a 4.5V to 28V input supply. The EUP2589 regulates the current in each LED string to the programmed value set by an external current setting resistor. The EUP2589 current matching can achieve ±1.5% and regulation accuracy can reach ±2%.

A 3μA shutdown current and 1.0V (ILED@60mA) feedback voltage and Maximum 65V output allows for up to 18 high-power LEDs in series will greatly improve efficiency and reduce power dissipation.

The device supports pulse width modulation (PWM) brightness dimming and DC voltage dimming. During digital PWM dimming, the WLED current is turned on/off at the duty cycle and frequency determined by the PWM signal on the PWMI pin. In DC voltage dimming, LEDs current turn ON/OFF frequency programmed by the capacitor from BOSC to GND.

The EUP2589 integrated multiple protect functions, such as LED Open, LED Short, Output Over voltage, Over thermal, Input Over current, and Under voltage lockout (UVLO), these protection will prevent the LCD backlight from damage.

FEATURES

- 3μA shutdown current
- 12 strings in parallel and up to 18 LEDs per string
- External PWM or DC Voltage Dimming Control
- Output voltage up to 65V
- Wide Input voltage range 4.5V to 28V
- Better than 1.5% LED Current Regulation Accuracy Between Strings
- Boost Switching frequency can be programmed by external resistor
- Multiple Fault Protections
  - -Current Limit protection
  - -Output Short circuit detection
  - -Over-temperature protection
  - -Output Over-voltage protection
- LED current turn off in shutdown mode
- Integrated UVLO/ Over Thermal protection
- Minimal 0.5μs LED On-Time regulation
- Thermal Enhanced 28pin TSSOP28 Package
- RoHS Compliant and 100% Lead (Pb)-Free Halogen-Free

APPLICATIONS

- LCD Monitor LED Backlighting
- LCD-TV LED Backlighting

Typical Application Circuit

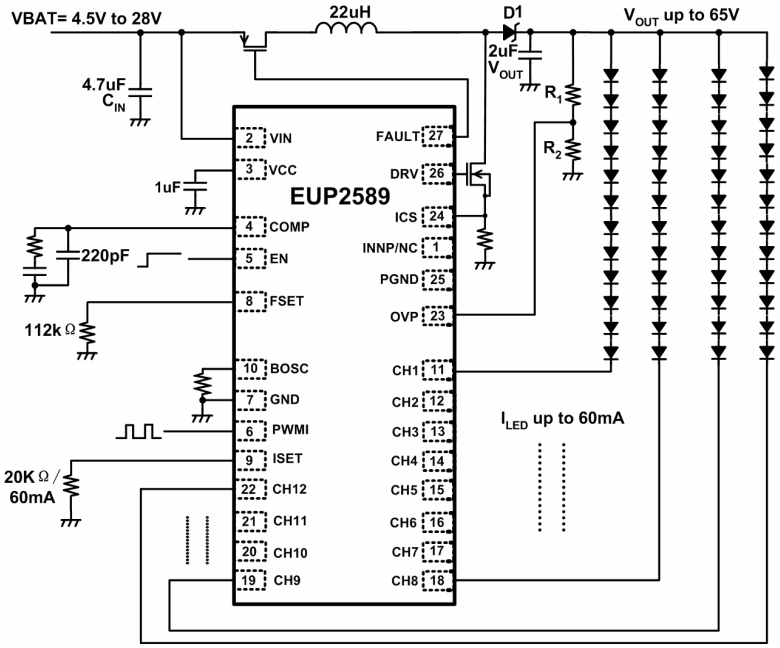

Figure 1. Typical Application circuits