PART NAME	CABLE MANAGEMENT PANEL 2U	PART No.	CM-1227

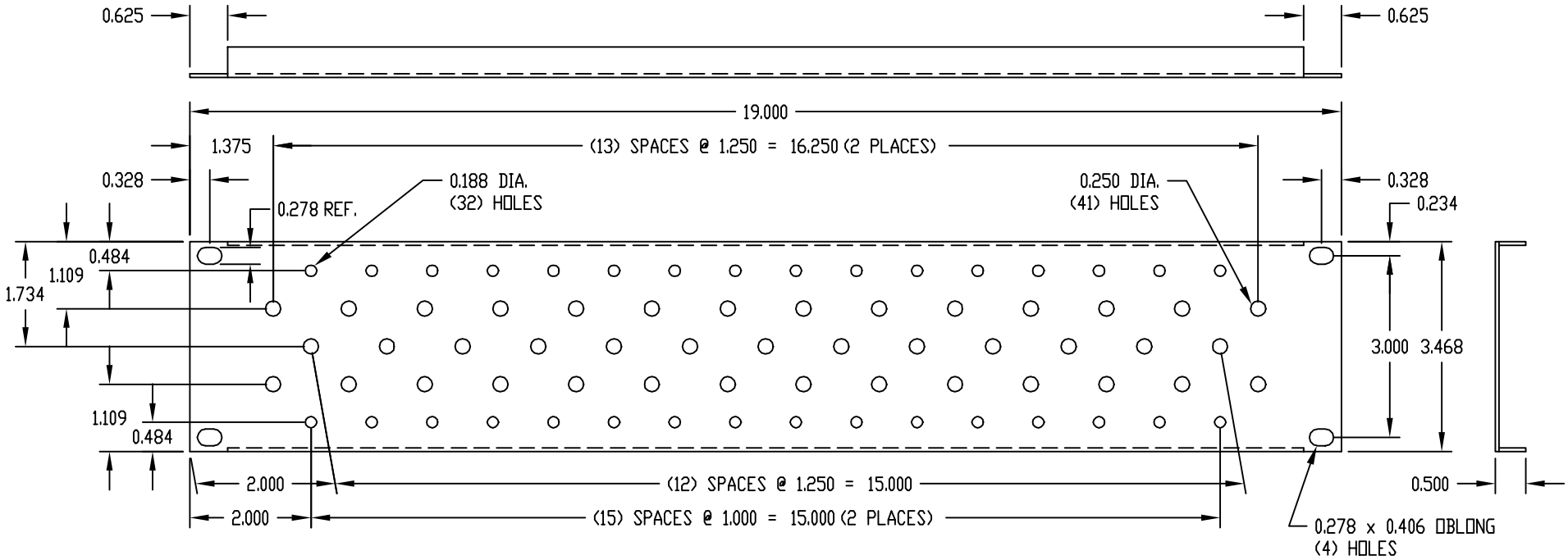

MATERIAL:

PANEL	16 GA. STEEL
CABLE RINGS	14 GA. STEEL
CABLE CLIPS	NYLON

FINISH:

PANEL & CABLE RINGS	SMOOTH BLACK
CABLE CLIPS	WHITE

SUPPLIED WITH:

- QTY. (4) #10-32 x 5/8 LG. SCREWS
- QTY. (4) #12-24 x 1/2 LG. SCREWS
- QTY. (2) #CM-1229 CABLE CLIP PACKAGES:
  - QTY. (24) CABLE CLIPS
- QTY. (3) #CM-1220 CABLE RING PACKAGES:
  - QTY. (3) CABLE RINGS
  - QTY. (6) #10-32 x 5/8 LG. SCREWS
  - QTY. (6) #12-24 x 1/2 LG. SCREWS
  - QTY. (6) #12-24 HEX NUTS

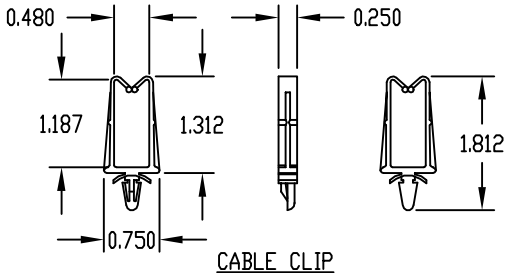
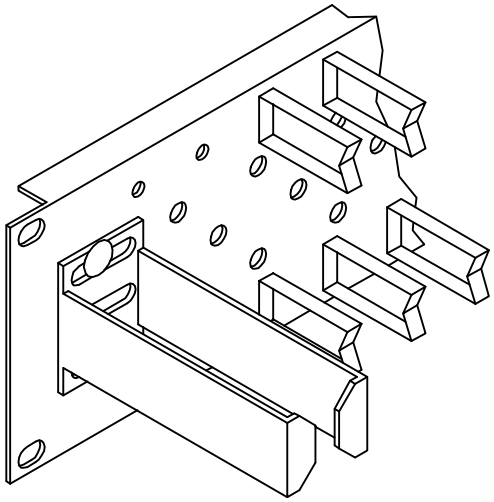
CABLE CLIP