P/N:TS6121CMS DATA SHEET

Feature

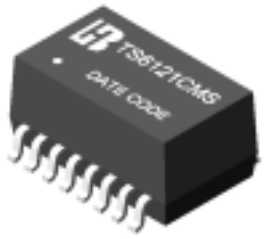

- Designed to meet IEEE 802.3u requirement, including 350uH OCL with 8mA bias.
- Operating temperature range: -40℃ to +85℃.
- Storage temperature range: -40℃ to +125℃.

Electrical Specifications @ 25°C						
Part Number	Turns Ratio (±5%)		OCL (uH Min) @ 100KHz/0.1V with 8mA Bias	$C_{w/w}$ (pF Max)	L.L (uH Max)	HI-POT (Vrms)
	1-3:16-14	6-8:11-9				
TS6121CMS	1CT:1CT	1CT:1CT	350	28	0.5	1500

Continue									
Part Number	Insertion Loss (dB Max)	Return Loss (dB Min)			Cross talk (dB Min)		DCMR (dB Min)		
	0.3-100 MHz	30MHz	60MHz	80MHz	0.3-60MHz	60-100MHz	30MHz	60MHz	100MHz
TS6121CMS	-1.0	-18	-14	-12	-45	-35	-40	-35	-30

Schematic

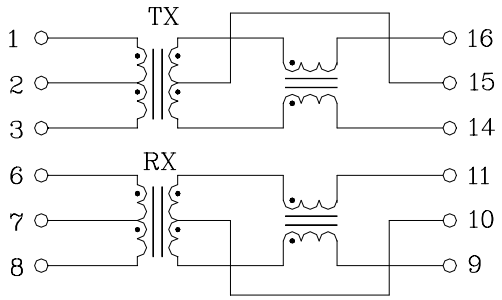

Mechanical

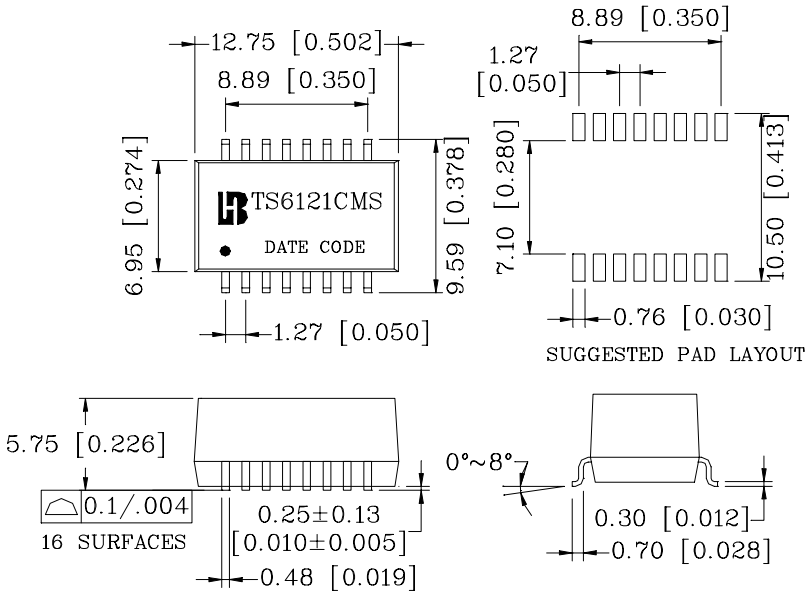

462 Boston St - Topsfield, MA 01983 - Phone: 978-887-8050 - Fax: 978-887-5434