DWG. NO.			
200-510-0630G			
REV	DESCRIPTION	BY DATE	APPD
C	ECR 7248	JWH 2/06/02	

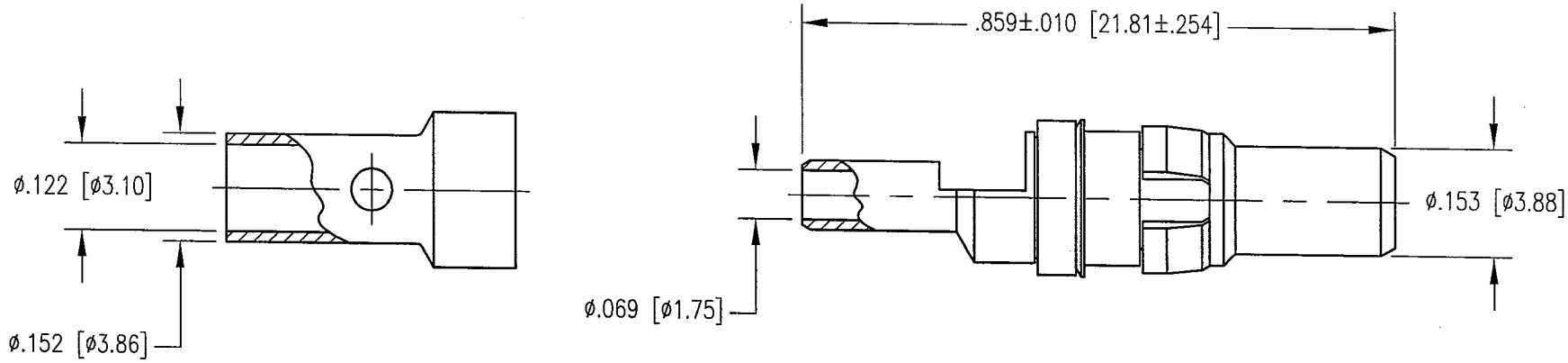

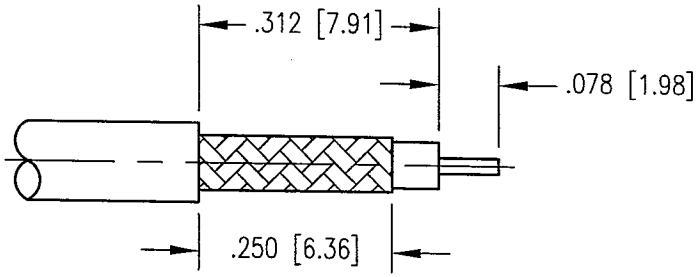

CABLE TRIMMING DIMENSIONS

NOTES:

1. MATERIALS:
   - CONTACT: COPPER ALLOY
   - INSULATOR: TEFLON PER ASTM D1710
   - CLIP RING: BERYLLIUM COPPER PER ASTM B194
   - SPRING WASHER: PHOSPHOR BRONZE PER ASTM B103
   - ALL OTHER METAL PARTS: BRASS PER ASTM B16
2. FINISH:
   - BODY AND CONTACT: .000030 MIN. GOLD PER MIL-G-45204 OVER .000050 MIN. NICKEL PER QQ-N-290
   - CLIP RING: .000100 MIN. NICKEL PER QQ-N-290 OVER COPPER FLASH
   - FERRULE AND SPRING WASHER: .000005 MIN. GOLD PER MIL-G-45204 OVER .000050 MIN. NICKEL PER QQ-N-290
3. FOR USE WITH RG-316 CABLE OR EQUIVALENT
4. FOR CABLING PROCEDURE USE CAP 5-07 WITH TRIMMING DIMENSIONS SHOWN.

PER ASME Y14.5M-1994
UNLESS OTHERWISE SPECIFIED:
DIMENSIONS ARE IN INCHES [MM]
TOLERANCES:
DECIMALS .XX ± .01 [0.254]
.XXX ± .005 [0.127]
ANGLES ± 2°
SCALE: 4:1

CUSTOMER DRAWING

DRAWN	DATE	CHECKED	DATE
JWH	2/06/02	mjf	2/14/02
APPROVED	DATE	APPROVED	DATE
MM	2/14/02	KJ	2/14/02

NORTHROP GRUMMAN

Winchester Electronics
400 Park Road
Watertown, CT 06795

TITLE: RDM STRAIGHT PLUG

A	200-510-0630G	SHT. 1 OF 1	REV. C

June 2006 - This drawing became the property of Winchester Electronics Corporation, Wallingford, CT.