10W CAR RADIO AUDIO AMPLIFIER

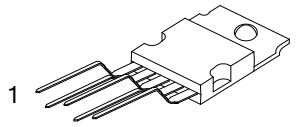

TO-220B

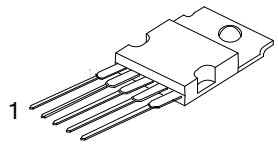

TO-220-5

■ DESCRIPTION

The UTC TDA2003 is a monolithic audio power amplifier integrated circuit.

■ FEATURES

*Very Low External Component Required.
*High Current Output (up to 3 A).
*Low Harmonic and Crossover Distortion.
*Built-in Over Temperature Protection.
*Short Circuit Protection Between all Pins.

■ ORDERING INFORMATION

Ordering Number			Package	Packing
Normal	Lead Free	Halogen Free		
TDA2003-TA5-T	TDA2003L-TA5-T	TDA2003G-TA5-T	TO-220-5	Tube
TDA2003-TB5-T	TDA2003L-TB5-T	TDA2003G-TB5-T	TO-220B	Tube

TDA2003L-TA5-T

(1)Packing Type
(2)Package Type
(3)Lead Free

(1) T: Tube
(2) TA5: TO-220-5, TB5: TO-220B
(3) G: Halogen Free, L: Lead Free, Blank: Pb/Sn

■ PIN DESCRIPTION

PIN NO.	PIN NAME
1	Non inverting input
2	Inverting input
3	Ground
4	Output
5	Supply Voltage

Copyright © 2011 Unisonic Technologies Co., Ltd

■ BLOCK DIAGRAM

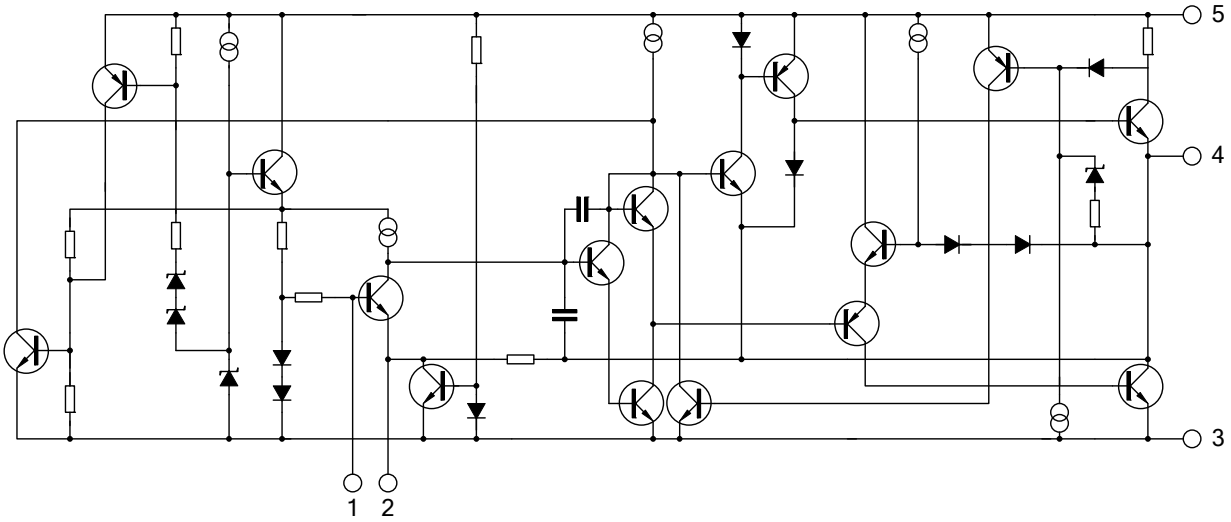

■ ABSOLUTE MAXIMUM RATINGS (Ta=25℃, unless otherwise specified.)

PARAMETER		SYMBOL	RATINGS	UNIT
Peak Supply Voltage		Vss	40	V
DC Supply Voltage		Vss	28	V
Operating Supply Voltage		Vss	18	V
Output Peak Current	Repetitive	$I_{O(PEAK)}$	3.5	A
	Non Repetitive		4.5	A
Power Dissipation at Tc = 90°C		P_D	20	W
Storage and Junction Temperature		T_{STG}	-40 ~ +150	°C

Note: Absolute maximum ratings are those values beyond which the device could be permanently damaged. Absolute maximum ratings are stress ratings only and functional device operation is not implied.

■ ELECTRICAL CHARACTERISTICS

(Ta=25°C, Refer to the test circuit, Vs=±16V, unless otherwise specified.)

PARAMETER	SYMBOL	TEST CONDITIONS		MIN	TYP	MAX	UNIT
DC CHARACTERISTICS							
Supply Voltage	Vss			8		18	V
Quiescent Output Voltage	V_{OUT}			6.1	6.9	7.7	V
Quiescent Drain Current	I_D				44	50	mA
AC CHARACTERISTICS							
Output Power	P_{OUT}	THD=10%, f=1kHz	R_L=4Ω	5.5	6		W
			R_L=2Ω	9	10		
			R_L=3.2Ω		7.5		
			R_L=1.6Ω		12		
Input Sensitivity	V_I	f=1kHz	P_{OUT}=0.5W, R_L=4Ω		14		mV
			P_{OUT}=6W, R_L=4Ω		55		
			P_{OUT}=0.5W, R_L=2Ω		10		
			P_{OUT}=10W, R_L=2Ω		50		
Input Saturation Voltage	$V_{I(RMS)}$			300			mV
Frequency Response(-3dB)	F	P_{OUT}=1W, R_L=4Ω		40		15000	Hz
Total Harmonic Distortion	THD	f=1kHz	P_{OUT}=0.05 ~ 4.5W, R_L=4Ω		0.15		%
			P_{OUT}=0.05 ~ 7.5W, R_L=2Ω		0.15		
Input Resistance(Pin 1)	R_I	open loop, f=1kHz		70	150		kΩ
Input Noise Current	iN				60	200	pA
Input Noise Voltage	eN				1	5	μV
Open Loop Voltage Gain	Gvo	f=1kHz			80		dB
		f=10kHz			60		dB
Closed Loop Voltage Gain	Gvc	f=1kHz, R_L=4Ω		39.3	40	40.3	dB
Efficiency, f=1kHz	η	P_{OUT}=6W, R_L=4Ω			69		%
		P_{OUT}=10W, R_L=2Ω			65		
Supply Voltage Rejection	SVR	f=100Hz, V_{RUPPLE}=0.5V R_G=10kΩ, R_L=4Ω		30	36		dB

■ TEST CIRCUIT

AC Test Circuit

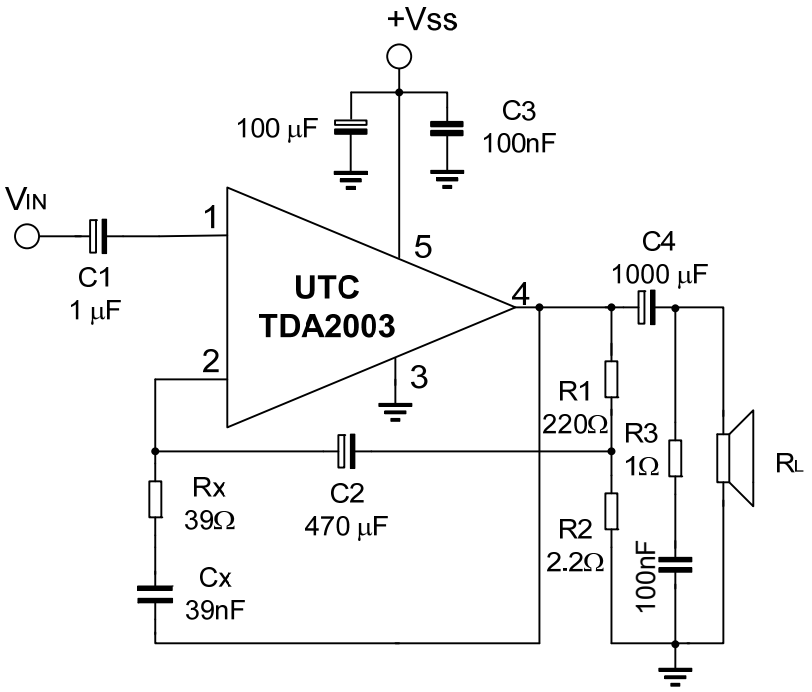

Rx=20*R2 Cx=1/(2 πB*R1)

DC Test Circuit

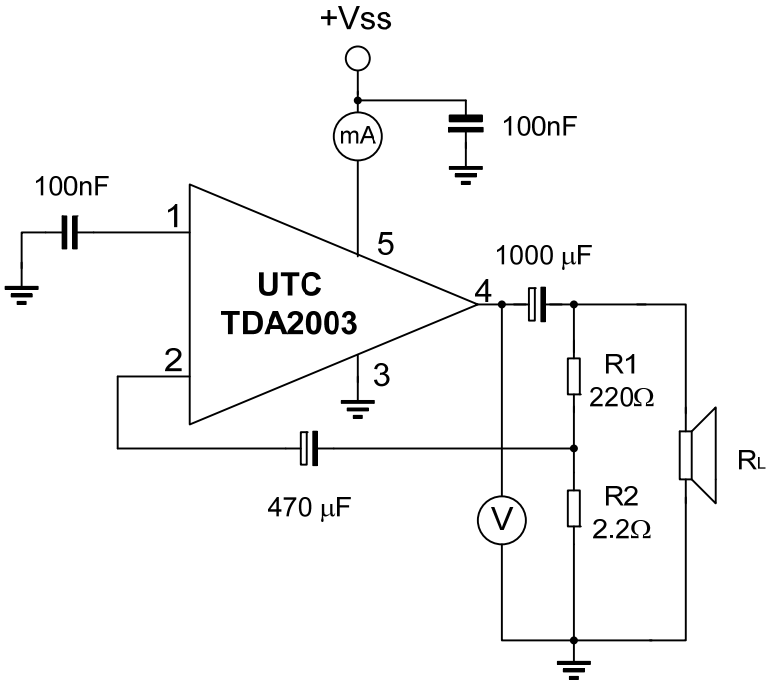

■ TYPICAL APPLICATION CIRCUIT

20W Bridge Configuration Application

The Values of the capacitors C3 and C4 are different to optimize the SVR (Typ. 40dB)

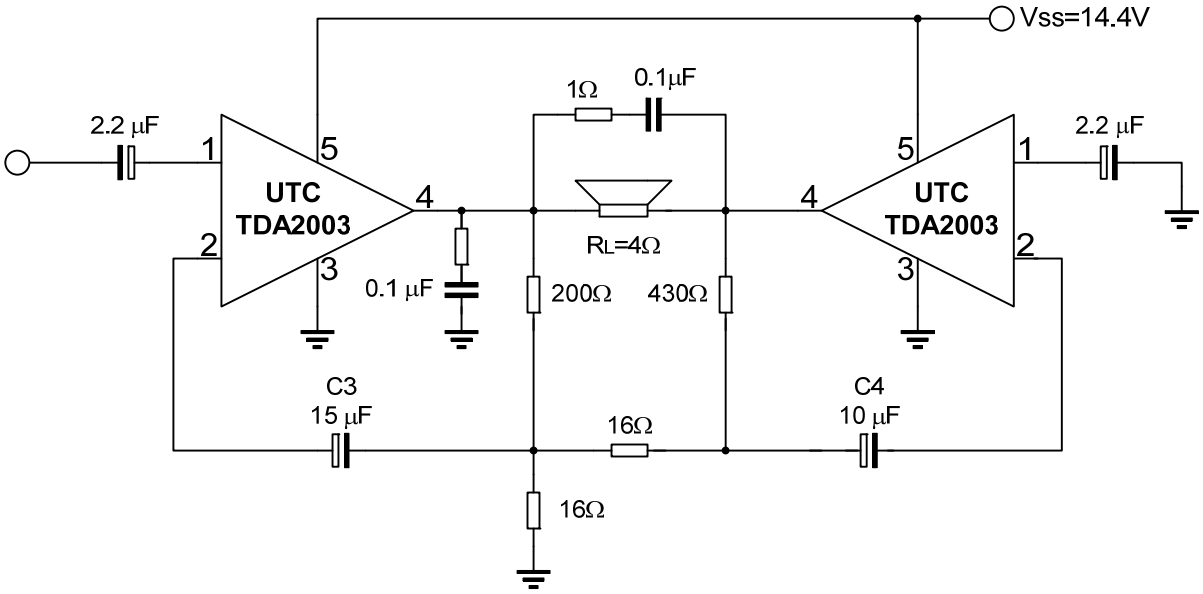

■ TYPICAL APPLICATION CIRCUIT

Low Cost Bridge Configuration Application Circuit(P_{OUT}=18W)

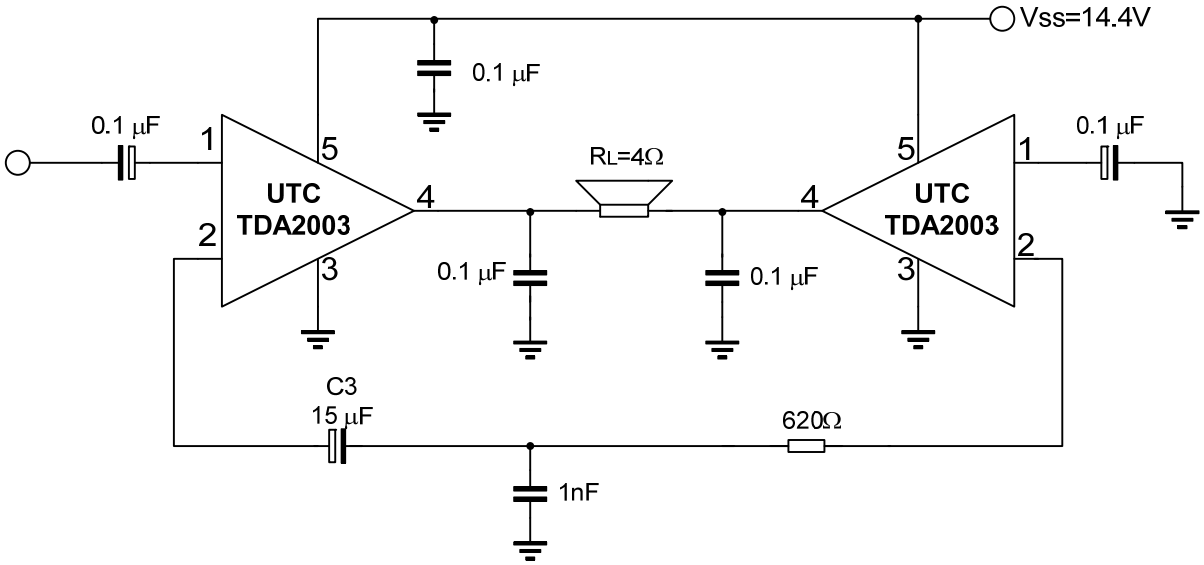

■ BUILT-IN PROTECTION SYSTEMS

LOAD DUMP VOLTAGE SURGE

The UTC **TDA2003** has a circuit which enables it to withstand a voltage pulse train, on pin 5.

If the supply voltage peaks to more than 40V, then an LC filter must be inserted between the supply and pin 5, in order to assure that the pulses at pin 5 will be head within the limits.

A suggested LC network. With this network, a train of pulses with amplitude up to 120V and width of 2ms can be applied at point A. This type of protection is ON when the supply voltage(pulsed or DC) exceeds 18V. For this reason the maximum operating supply voltage is 18V.

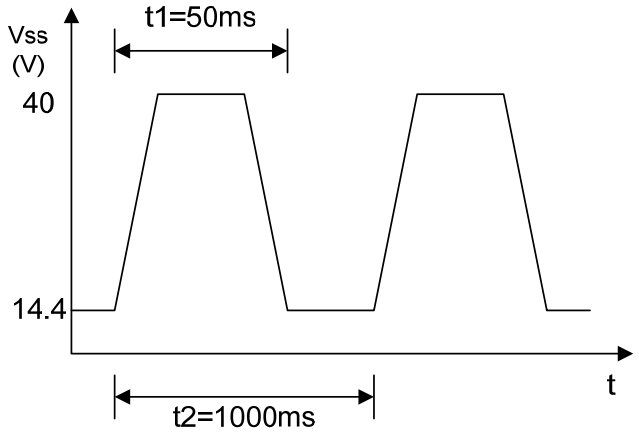

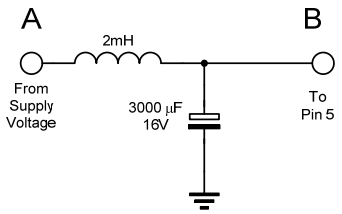

SHORT CIRCUIT (AC and DC Conditions)

The UTC **TDA2003** can withstand a permanent short-circuit on the output for a supply voltage up to 16V.

POLARITY INVERSION

High current (up to 5A) can be handled by the device with no damage for a longer period than the blow-out time of a quick 1A fuse(normally connected in series with the supply).
The feature is added to avoid destruction if, during fitting to the car, a mistake on connection of the supply is made.

OPEN GROUND

When the radio is in the ON condition and the ground is accidentally opened, a standard audio amplifier will be damaged. On the UTC **TDA2003** protection diodes are included to avoid any damage.

INDUCTIVE LOAD

A protection diode is provide between pin 4 and pin 5(see the internal schematic diagram) to allow use of the UTC TDA2003 with inductive loads. In particular, the UTC TDA2003 can drive a coupling transformer for audio modulation.

DC VOLTAGE

The maximum operating DC voltage on the UTC **TDA2003** is 18V.
However the device can withstand a DC voltage up to 28V with no damage. This could occur during winter if two batteries were series connected to crank the engine.

■ BUILT-IN PROTECTION SYSTEMS(Cont.)

THERMAL SHUT-DOWN

The presence of a thermal limiting circuit offers the following advantages:
(1) An overload on the output (even if it is permanent),or an excessive ambient temperature can be easily withstood.
(2) The heat-sink can have a smaller factor compared with that of a conventional circuit. There is no device damage in case of excessive junction temperature: all that happens is that Po (and therefore P_D) and Id are reduced.

■ COMPONENTS USAGE SUGGESTION

The recommended values of the components are those shown on typical application circuit Different values can be used. The following table can help the designer.

COMPONENT	RECOMMENDED VALUE	PURPOSE	LARGE THAN RECOMMENDED VALUE	SMALLER THAN RECOMMENDED VALUE
R1	(Gv-1)*R2	gain setting.		increase of drain current
R2	2.2Ω	gain and SVR setting.	Decrease of SVR	
R3	1Ω	Frequency stability	Danger of oscillation at high frequencies with inductive loads.	
Rx	≈20R2	Upper frequency cutoff	Poor high frequencies attenuation	Danger of oscillation
C1	2.2μF	Input DC decoupling		Noise at switch-on switch-off
C2	470μF	Ripple rejection		Decrease of SVR
C3	0.1μF	Supply voltage bypass		Danger of oscillation
C4	1000μF	Supply voltage bypass		Higher low frequency cutoff
C5	0.1μF	Frequency stability		Danger of oscillation at high frequencies with inductive loads.
Cx	≈1/(2π*B*R1)	Upper frequency cutoff	Lower bandwidth	Larger bandwidth

■ TYPICAL CHARACTORISTICS

Quiescent output voltage vs.Supply voltage

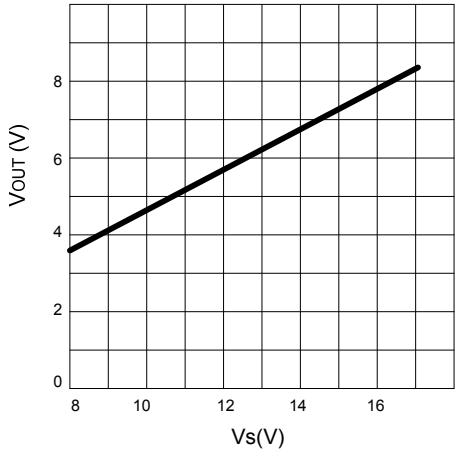

Quiescent drain current vs.Supply voltage

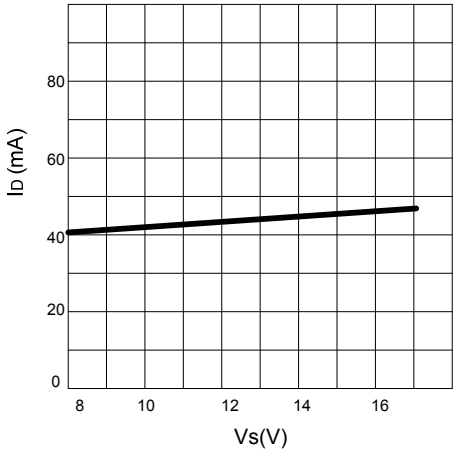

Output power vs.Supply voltage

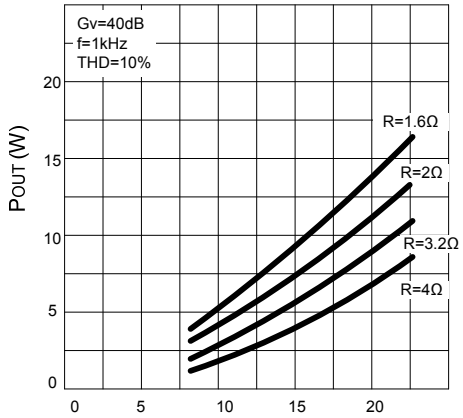

Output power vs.load resistance

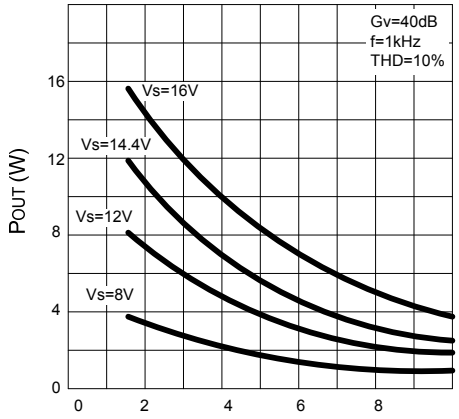

Vs(V)
Gain vs. Input sensitivity

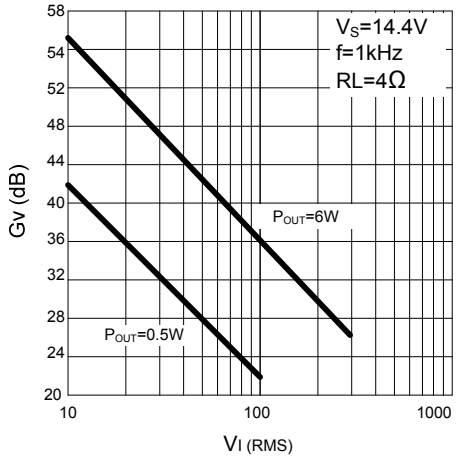

RL (Ω)
Gain vs. Input sensitivity

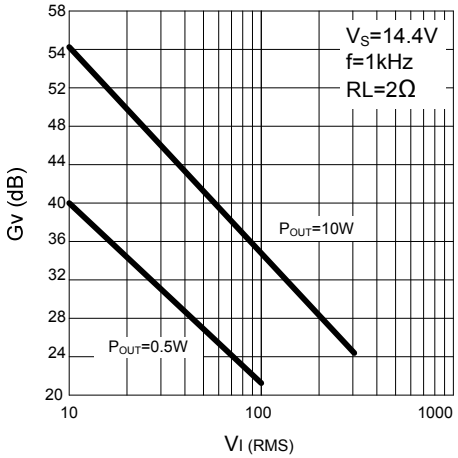

■ TYPICAL CHARACTORISTICS (Cont.)

Distortion vs. output power

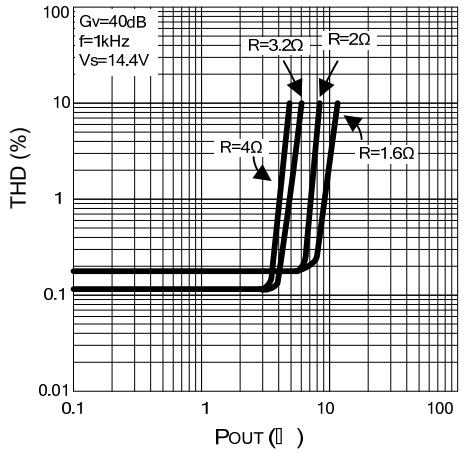

Distortion vs.frequency

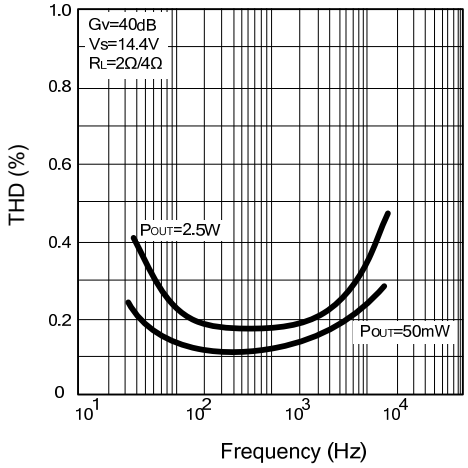

Supply voltage rejection vs. voltage gain

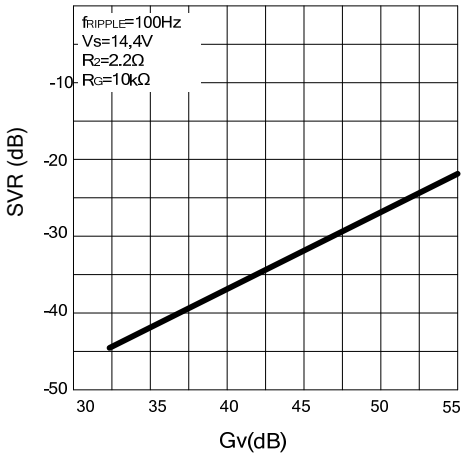

Supply voltage rejection vs.frequency

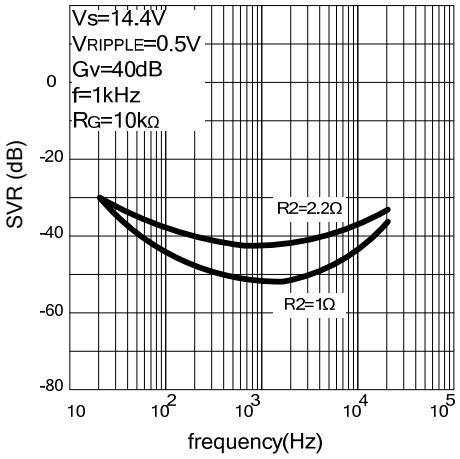

Power dissipation and efficiency vs. output power (RL=4Ω)

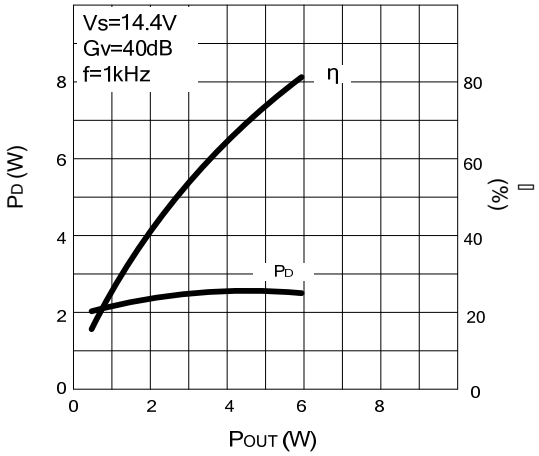

Power dissipation and efficiency vs. output power(RL=2Ω)

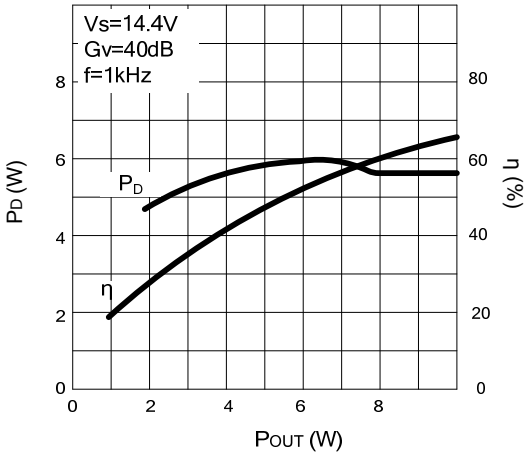

■ TYPICAL CHARACTORISTICS (Cont.)

Maximum Power dissipation and supply voltage(sine wave operation)

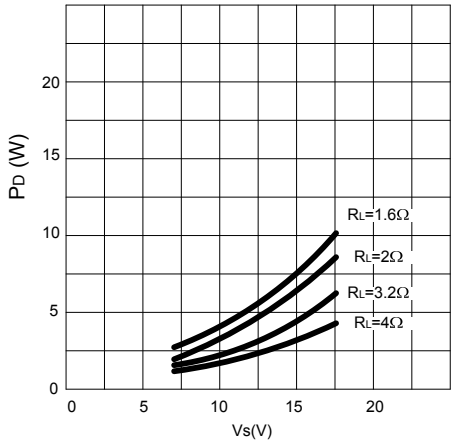

Maximum allowable dissipation and ambient temperature

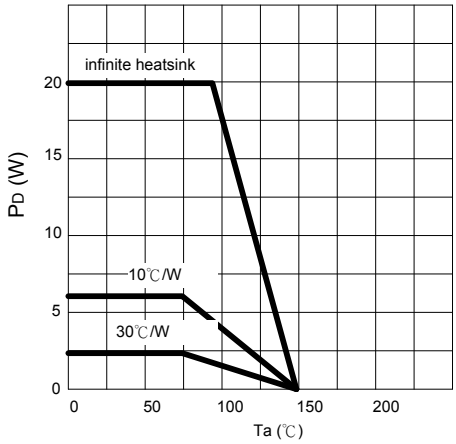

Typical values of capacitor(Cx) for different values of frequency response

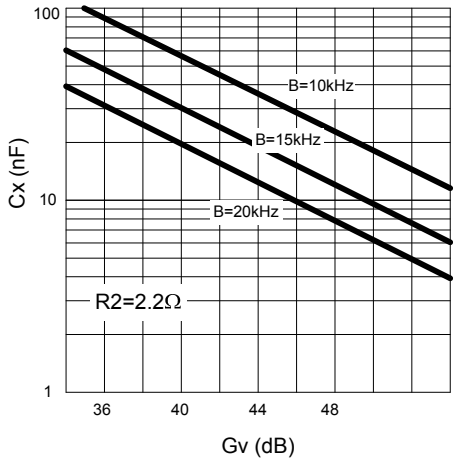

UTC assumes no responsibility for equipment failures that result from using products at values that exceed, even momentarily, rated values (such as maximum ratings, operating condition ranges, or other parameters) listed in products specifications of any and all UTC products described or contained herein. UTC products are not designed for use in life support appliances, devices or systems where malfunction of these products can be reasonably expected to result in personal injury. Reproduction in whole or in part is prohibited without the prior written consent of the copyright owner. The information presented in this document does not form part of any quotation or contract, is believed to be accurate and reliable and may be changed without notice.