10/100Base-TX Interface Module with Enhanced Common Mode Attenuation

EPF8196F2 & EPF8196F2-RC

- Guaranteed to operate with 8 mA DC Bias at 70°C
- Complies with or exceeds IEEE 802.3, 10/100Base-TX Standards
- Add "-RC" after part number for RoHS Compliant
- Storage Temperature : -40°C to +125°C
- Operating Temperature : 0°C to +70°C

Electrical Parameters @ 25° C

OCL @ 70°C	**Insertion Loss** (dB Max.)		**Return Loss** (dB Min.)			**Common Mode Rejection** (dB Min.)			**Crosstalk** (dB Min.)
100 KHz, 0.1 Vrms 8 mA DC Bias	1-80 MHz	150 MHz	1-30 MHz	60 MHz	80 MHz	1-30 MHz	30-100 MHz	100-500 MHz	1-100 MHz
Cable Side	Xmit/Rcv	Xmit/Rcv	Xmit/Rcv	Xmit/Rcv	Xmit/Rcv	Xmit/Rcv	Xmit/Rcv	Xmit/Rcv	
350 µH	-1/-1	-3/-3	-18/-18	-12/-12	-10/-10	-40/-40	-30/-30	-10/-10	-35

• **Isolation** : 1500 Vrms • **Impedance** : 100 Ω • **Rise Time** : 3.0 nS Max. •

Package

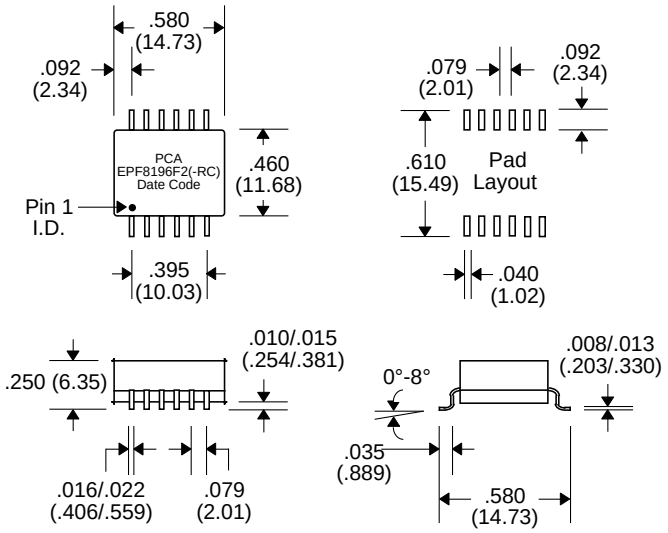

Schematic

Transmit Channel

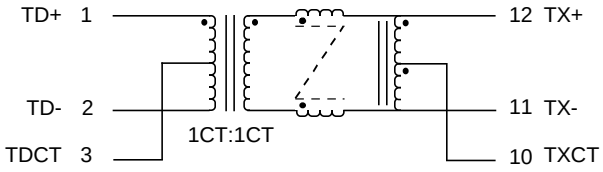

Receive Channel

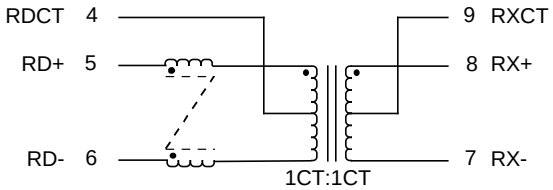

Notes :	**EPF8196F2**	**EPF8196F2-RC**
1. Lead Finish	SnPb	Hot Tin Dip (Sn) †
2. Peak Temperature Rating	225°C	245°C
3. Moisture Sensitive Levels	MSL = 3 (168 Hours, ≤30°C/60%RH)	MSL = 4 (72 Hours, ≤30°C/60%RH)
4. Weight	2.24 grams	2.24 grams
5. Packaging Information (Tube)	36 pieces/tube	36 pieces/tube
(Tape & Reel)	TBD pieces/13" reel	TBD pieces/13" reel

† Lead Material : Ni Barrier over Cu

Unless Otherwise Specified Dimensions are in Inches /mm ± .010 /.25

PCA ELECTRONICS, INC.
16799 SCHOENBORN ST.
NORTH HILLS, CA 91343

Product performance is limited to specified parameters. Data is subject to change without prior notice.

TEL: (818) 892-0761
FAX: (818) 894-5791
http://www.pca.com