High Voltage Ceramic Chip Capacitors

Introduction

Cal-Chip Electronics, Incorporated operates a policy of continuous development for its ranges of Multilayer Ceramic Capacitors. Our unique construction process ensures excellent volumetric efficiency and stability of capacitance with temperature.
High Voltage Chip MLC's have extended values in the 500V series to those previously offered, together with voltage ranges up to 10kV.

Handling

Ceramics are dense, hard, brittle and abrasive materials. They are liable to suffer mechanical damage in the form of chips or cracks, if improperly handled.
MLC's should never be handled with metallic instruments.

Dielectric Characteristics

	COG / NPO	X7R	Y5V & Z5U
Dielectric classification:	Ultra Stable	Stable	General Purpose
Rated temperature range:	-55°C to +125°C	-55°C to +125°C	+10°C to +85°C
Maximum capacitance change over temperature range	0±30ppm/°C	±15%	+22 to -56%
Tangent of loss angle (tan δ)	Cr>50pF≤0.0015 Cr≤50pF=0.0015 $(\frac{15}{Cr}+0.7)$	≤0.025	≤0.030
Insulation resistance (Ri) Time Constant (Ri X Cr) (whichever is less)	100GΩ or 1000s	100GΩ or 1000s	10GΩ or 100s
Capacitance tolerance	<10pF ±0.25, ±0.5pF ≥10pF ±1, ±2, ±5, ±10%	+5%, ±10%, ±20%	±20%, -20+80%
Proof Voltage 500V Proof Voltage ≥1kV	1.5 x rated volts 1.5 x rated volts	1.5 x rated volts 1.25 x rated volts	1.5 x rated volts
Climatic category (IEC)	55/125/56	55/125/56	25/085/56
Aging characteristic (Typ.)	Zero	1% per time decade	6% per time decade

Surface Mount Chip Capacitors

Ordering Information

Example: CHV 3640 N 1k0 103 K X T

- Chip Type: CHV
- Type No/Size Ref: 3640
- Termination Options: N
  - F=Silver Palladium
  - N=Nickel Barrier
  - A=High Leach Resistant Silver Palladium
- Voltage d.c.: 1k0
  - 500=500V, 1k0=1kV, 2k0=2kV, 3k0=3kV, 4k0=4kV, 5k0=5kV, 250=250V, 10k0=10kV
- Capacitance Code: 103
- Capacitance Tolerance Code: K
  - F=1%, G=2%, J=5%, K=10%, M=20%, Z=20-80%
- Dielectric Code: X
  - C=COG, X=X7R, Z=Z5U, Y=Y5V
- Packaging: T
  - T=178mm(7" reel)

High Voltage Ceramic Chip Capacitors- 0603 & 0805 (250V, 500V, 630V and 1KV)

		CHV0603			CHV0805							
Chip Size		**0603**			**0805**							
Length	mm	1.6±0.2			2.0±0.3							
	Inches	0.063±0.008			0.08±0.012							
Width	mm	0.8±0.2			1.25±0.2							
	Inches	0.031±0.008			0.05±0.008							
Thickness	mm	0.8±0.2			1.8							
	Inches	0.031±0.008			0.07							
Termination Band		Min	Max		Min						Max	
	mm	0.1	0.4		0.25						0.75	
	Inches	0.004	0.015		0.01						0.03	
Dielectric		COG	X7R	Y5V/Z5U	COG				X7R			Y5V/Z5U
Rated Voltage		250	250	N/A	250	500	630	1kV	250	500	1kV	N/A
Capacitance	Code											
1.0pF	1R0											
1.2	1R2											
1.5	1R5											
1.8	1R8											
2.2	2R2											
2.7	2R7											
3.3	3R3											
3.9	3R9											
4.7	4R7											
5.6	5R6											
6.8	6R8											
8.2	8R2											
10	100											
12	120											
15	150											
18	180											
22	220											
27	270											
33	330											
39	390											
47	470											
56	560											
68	680											
82	820											
100	101											
120	121											
150	151											
180	181											
220	221											
270	271											
330	331											
390	391											
470	471											
560	561											
680	681											
820	821											
1.0nF	102											
1.2	122											
1.5	152											
1.8	182											
2.2	222											
2.7	272											
3.3	332											
3.9	392											
4.7	472											
5.6	562											
6.8	682											
8.2	822											
10	103											
12	123											
15	153											
18	183											
22	223											
27	273											
33	333											
39	393											
47	473											
56	563											
68	683											
82	823											
100	104											
120	124											
150	154											
180	184											
220	224											
330	334											
390	394											
470	474											

High Voltage Ceramic Chip Capacitors- 1808 & 1825 (250V, 500V and 1KV)

		CHV1808									CHV1825								
Type		**1808**									**1825**								
Length	mm	4.5±0.4									4.5±0.5								
	Inches	0.177±0.016									0.177±0.02								
Width	mm	2.0±0.3									6.3±0.5								
	Inches	0.08±0.012									0.248±0.02								
Thickness	mm	2.0									3.0								
	Inches	0.080									0.118								
Term. Band		Max									Max								
	mm	2.0									4.0								
	Inches	0.080									.16								
Dielectric		COG			X7R			Y5V/Z5U			COG			X7R			Y5V/Z5U		
Cap. Range	Code	250	500	1KV	250	500	1KV	250	500	1KV	250	500	1KV	250	500	1KV	250	500	1KV
1.0pF	1R0																		
1.2	1R2																		
1.5	1R5																		
1.8	1R8																		
2.2	2R2																		
2.7	2R7																		
3.3	3R3																		
3.9	3R9																		
4.7	4R7	▮	▮	▮															
5.6	5R6	▮	▮	▮															
6.8	6R8	▮	▮	▮															
8.2	8R2	▮	▮	▮															
10	100	▮	▮	▮															
12	120	▮	▮	▮															
15	150	▮	▮	▮	▮	▮	▮												
18	180	▮	▮	▮	▮	▮	▮												
22	220	▮	▮	▮	▮	▮	▮												
27	270	▮	▮	▮	▮	▮	▮												
33	330	▮	▮	▮	▮	▮	▮												
39	390	▮	▮	▮	▮	▮	▮						▮						
47	470	▮	▮	▮	▮	▮	▮						▮						
56	560	▮	▮	▮	▮	▮	▮						▮						
68	680	▮	▮	▮	▮	▮	▮						▮						
82	820	▮	▮	▮	▮	▮	▮						▮						
100	101	▮	▮	▮	▮	▮	▮						▮						
120	121	▮	▮	▮	▮	▮	▮						▮						
150	151	▮	▮	▮	▮	▮	▮						▮						
180	181	▮	▮	▮	▮	▮	▮						▮						
220	221	▮	▮	▮	▮	▮	▮						▮						
270	271	▮	▮	▮	▮	▮	▮						▮						
330	331	▮	▮	▮	▮	▮	▮						▮						
390	391	▮	▮	▮	▮	▮	▮						▮						
470	471	▮	▮	▮	▮	▮	▮						▮			▮			
560	561	▮	▮	▮	▮	▮	▮						▮			▮			
680	681	▮	▮	▮	▮	▮	▮						▮			▮			
820	821	▮	▮	▮	▮	▮	▮						▮			▮			
1.0nF	102	▮	▮	▮	▮	▮	▮						▮			▮			
1.2	122	▮	▮	▮	▮	▮	▮						▮			▮			
1.5	152	▮	▮	▮	▮	▮	▮						▮			▮			
1.8	182	▮	▮	▮	▮	▮	▮						▮			▮			
2.2	222	▮	▮	▮	▮	▮	▮						▮			▮			
2.7	272	▮	▮	▮	▮	▮	▮						▮			▮			
3.3	332				▮	▮	▮	▮	▮				▮			▮			
3.9	392				▮	▮	▮	▮	▮				▮			▮			
4.7	472				▮	▮	▮	▮	▮				▮			▮			
5.6	562				▮	▮	▮	▮	▮				▮			▮			
6.8	682				▮	▮	▮	▮	▮				▮			▮			
8.2	822				▮	▮	▮	▮	▮				▮			▮			
10	103				▮	▮	▮	▮	▮							▮			
12	123				▮	▮	▮	▮	▮							▮			
15	153				▮	▮	▮	▮	▮							▮			
18	183				▮	▮	▮	▮	▮							▮			
22	223				▮	▮	▮	▮	▮							▮			
27	273				▮	▮	▮	▮	▮							▮			
33	333				▮	▮	▮	▮	▮							▮			
39	393				▮	▮	▮	▮	▮							▮			
47	473				▮	▮	▮	▮	▮							▮			
56	563				▮	▮	▮	▮	▮							▮			
68	683				▮	▮	▮									▮			
82	823				▮	▮	▮									▮			
100	104				▮	▮	▮												
120	124																		
150	154																		
180	184																		
220	224																		
270	274																		
330	334																		
390	394																		
470	474																		
560	564																		
680	684																		

High Voltage Ceramic Chip Capacitors- 1808 & 1825 (2KV, 3KV, 4KV & 5KV)

		CHV1808									CHV1825									
Type		**1808**									**1825**									
Length	mm	4.5±0.4									4.5±0.5									
	Inches	0.177±0.016									0.177±0.02									
Width	mm	2.0±0.3									6.3±0.5									
	Inches	0.08±0.012									0.248±0.02									
Thickness	mm	2.0									3.0									
	Inches	0.080									0.118									
Term. Band		Max									Max									
	mm	2.0									4.0									
	Inches	0.080									.16									
Dielectric		COG			X7R			Y5V/Z5U			COG				X7R			Y5V/Z5U		
Cap. Range	Code	2KV	3KV	4KV	2KV	3KV	4KV	2KV	3KV	4KV	2KV	3KV	4KV	5KV	2KV	3KV	4KV	2KV	3KV	4KV
1.0pF	1R0																			
1.2	1R2																			
1.5	1R5																			
1.8	1R8																			
2.2	2R2																			
2.7	2R7																			
3.3	3R3																			
3.9	3R9																			
4.7	4R7																			
5.6	5R6																			
6.8	6R8																			
8.2	8R2																			
10	100																			
12	120																			
15	150																			
18	180																			
22	220																			
27	270																			
33	330																			
39	390																			
47	470																			
56	560																			
68	680																			
82	820																			
100	101																			
120	121																			
150	151																			
180	181																			
220	221																			
270	271																			
330	331																			
390	391																			
470	471																			
560	561																			
680	681																			
820	821																			
1.0nF	102																			
1.2	122																			
1.5	152																			
1.8	182																			
2.2	222																			
2.7	272																			
3.3	332																			
3.9	392																			
4.7	472																			
5.6	562																			
6.8	682																			
8.2	822																			
10	103																			
12	123																			
15	153																			
18	183																			
22	223																			
27	273																			
33	333																			
39	393																			
47	473																			
56	563																			
68	683																			
82	823																			
100	104																			
120	124																			
150	154																			
180	184																			
220	224																			
270	274																			
330	334																			
390	394																			
470	474																			
560	564																			
680	684																			

High Voltage Ceramic Chip Capacitors- COG, X7R, and Z5U (250V & 500V)

		CHV1206			CHV1210			CHV1812			CHV2220			CHV2225			CHV3640		CHV5550		CHV8060	
Type		1206			1210			1812			2220			2225			3640		5550		8060	
Length	mm	3.2±0.3			3.2±0.3			4.5±0.35			5.7±0.4			5.7±0.4			9.2±0.5		14.0±0.5		20.3±0.5	
	Inches	0.125±0.012			0.125±0.012			0.18±0.014			0.225±0.016			0.225±0.016			0.36±0.02		0.55±0.02		0.80±0.02	
Width	mm	1.6±0.2			2.5±0.3			3.2±0.3			5.0±0.4			6.3±0.4			10.16±0.5		12.7±0.5		15.24±0.5	
	Inches	0.063±0.008			0.10±0.012			0.125±0.012			0.197±0.016			0.25±0.012			0.40±0.02		0.50±0.02		0.60±0.02	
Thickness	mm	1.6			1.8			1.8			1.8			1.8			2.0		2.5		2.5	
	Inches	0.063			0.07			0.07			0.07			0.07			0.08		0.1		0.1	
Termination Band		Min	Max		Min	Max		Min	Max		Min	Max		Min	Max		Min	Max	Min	Max	Min	Max
	mm	0.25	0.75		0.25	0.75		0.25	0.75		0.25	0.75		0.25	0.75		0.5	1.5	0.5	1.5	0.5	1.5
	Inches	0.01	0.03		0.01	0.03		0.01	0.03		0.01	0.03		0.01	0.03		0.02	0.06	0.02	0.06	0.02	0.06
Dielectric		COG	X7R	Z5U	COG	X7R	Z5U	COG	X7R	Z5U	COG	X7R	Z5U	COG	X7R	Z5U	COG	X7R	COG	X7R	COG	X7R
Cap. Range	Code																					
1.0pF	1R0																					
1.2	1R2																					
1.5	1R5																					
1.8	1R8																					
2.2	2R2																					
2.7	2R7																					
3.3	3R3																					
3.9	3R9																					
4.7	4R7																					
5.6	5R6																					
6.8	6R8																					
8.2	8R2																					
10	100																					
12	120																					
15	150																					
18	180																					
22	220																					
27	270																					
33	330																					
39	390																					
47	470																					
56	560																					
68	680																					
82	820																					
100	101																					
120	121																					
150	151																					
180	181																					
220	221																					
270	271																					
330	331																					
390	391																					
470	471																					
560	561																					
680	681																					
820	821																					
1.0nF	102																					
1.2	122																					
1.5	152																					
1.8	182																					
2.2	222																					
2.7	272																					
3.3	332																					
3.9	392																					
4.7	472																					
5.6	562																					
6.8	682																					
8.2	822																					
10	103																					
12	123																					
15	153																					
18	183																					
22	223																					
27	273																					
33	333																					
39	393																					
47	473																					
56	563																					
68	683																					
82	823																					
100	104																					
120	124																					
150	154																					
180	184																					
220	224																					
270	274																					
330	334																					
390	394																					
470	474																					
560	564																					
680	684																					
820	824																					
1.0uF	105																					
1.2	125																					
1.5	155																					
1.8	185																					
2.2	225																					
2.7	275																					
3.3	335																					
3.9	395																					
4.7	475																					
5.6	565																					
6.8	685																					
8.2	825																					
10	106																					
22	226																					
33	336																					
47	476																					

High Voltage Ceramic Chip Capacitors- COG & X7R (1KV & 2KV)

		CHV1206		CHV1210		CHV1812		CHV2220		CHV2225		CHV3640		CHV5550		CHV8060	
Type		1206		1210		1812		2220		2225		3640		5550		8060	
Length	mm	3.2±0.3		3.2±0.3		4.5±0.35		5.7±0.4		5.7±0.4		9.2±0.5		14.0±0.5		20.3±0.5	
	Inches	0.125±0.012		0.125±0.012		0.18±0.014		0.225±0.016		0.225±0.016		0.36±0.02		0.55±0.02		0.80±0.02	
Width	mm	1.6±0.2		2.5±0.3		3.2±0.3		5.0±0.4		6.3±0.4		10.16±0.5		12.7±0.5		15.24±0.5	
	Inches	0.063±0.008		0.10±0.012		0.125±0.012		0.197±0.016		0.25±0.012		0.40±0.02		0.50±0.02		0.60±0.02	
Thickness	mm	1.6		1.8		1.8		1.8		1.8		2.0		2.5		2.5	
	Inches	0.063		0.07		0.07		0.07		0.07		0.08		0.1		0.1	
Termination Band		Min	Max	Min	Max	Min	Max	Min	Max	Min	Max	Min	Max	Min	Max	Min	Max
	mm	0.25	0.75	0.25	0.75	0.25	0.75	0.25	0.75	0.25	0.75	0.5	1.5	0.5	1.5	0.5	1.5
	Inches	0.01	0.03	0.01	0.03	0.01	0.03	0.01	0.03	0.01	0.03	0.02	0.06	0.02	0.06	0.02	0.06
Dielectric		COG	X7R	COG	X7R	COG	X7R	COG	X7R	COG	X7R	COG	X7R	COG	X7R	COG	X7R
Voltage		1kV 2kV	1kV 2kV	1kV 2kV	1kV 2kV	1kV 2kV	1kV 2kV	1kV 2kV	1kV 2kV	1kV 2kV	1kV 2kV	1kV 2kV	1kV 2kV	1kV 2kV	1kV 2kV	1kV 2kV	1kV 2kV
Cap. Range	Code																
1.0pF	1R0																
1.2	1R2																
1.5	1R5																
1.8	1R8																
2.2	2R2																
2.7	2R7																
3.3	3R3																
3.9	3R9																
4.7	4R7																
5.6	5R6																
6.8	6R8																
8.2	8R2																
10	100																
12	120																
15	150																
18	180																
22	220																
27	270																
33	330																
39	390																
47	470																
56	560																
68	680																
82	820																
100	101																
120	121																
150	151																
180	181																
220	221																
270	271																
330	331																
390	391																
470	471																
560	561																
680	681																
820	821																
1.0nF	102																
1.2	122																
1.5	152																
1.8	182																
2.2	222																
2.7	272																
3.3	332																
3.9	392																
4.7	472																
5.6	562																
6.8	682																
8.2	822																
10	103																
12	123																
15	153																
18	183																
22	223																
27	273																
33	333																
39	393																
47	473																
56	563																
68	683																
82	823																
100	104																
120	124																
150	154																
180	184																
220	224																
270	274																
330	334																
390	394																
470	474																
560	564																
680	684																
820	824																
1.0uF	105																
1.2	125																
1.5	155																
2.2	225																

High Voltage Ceramic Chip Capacitors- COG & X7R (3kV, 4kV and 5kV)

		CHV1812				CHV2220						CHV2225		CHV3640						CHV5550						CHV8060					
Type		1812				2220						2225		3640						5550						8060					
Length	mm	4.5±0.35				5.7±0.4						5.7±0.4		9.2±0.5						14.0±0.5						20.3±0.5					
	Inches	0.18±0.014				0.225±0.016						0.225±0.016		0.36±0.02						0.55±0.02						0.80±0.02					
Width	mm	3.2±0.3				5.0±0.4						6.3±0.4		10.2±0.5						12.7±0.5						15.2±0.5					
	Inches	0.126±0.012				0.197±0.016						0.25±0.016		0.40±0.02						0.50±0.02						0.60±0.02					
Thickness	mm	4.0				4.0						4.0		2.5						2.5						2.5					
	Inches	0.157				0.157						0.157		0.1						0.1						0.1					
Termination Band		Min		Max		Min			Max			Min	Max	Min			Max			Min			Max			Min			Max		
	mm	0.25		0.75		0.25			0.75			0.25	0.75	0.5			1.5			0.5			1.5			0.5			1.5		
	Inches	0.01		0.03		0.01			0.03			0.01	0.03	0.02			0.06			0.02			0.06			0.02			0.06		
Dielectric		COG		X7R		COG			X7R			COG	X7R	COG			X7R			COG			X7R			COG			X7R		
Voltage		3kV	4kV	3kV	4kV	3kV	4kV	5kV	3kV	4kV	5kV	3kV	3kV	3kV	4kV	5kV	3kV	4kV	5kV	3kV	4kV	5kV	3kV	4kV	5kV	3kV	4kV	5kV	3kV	4kV	5kV
Cap Range	Code																														
10pF	100																														
12	120																														
15	150																														
18	180																														
22	220																														
27	270																														
33	330																														
39	390																														
47	470																														
56	560																														
68	680																														
82	820																														
100	101																														
120	121																														
150	151																														
180	181																														
220	221																														
270	271																														
330	331																														
390	391																														
470	471																														
560	561																														
680	681																														
820	821																														
1.0nF	102																														
1.2	122																														
1.5	152																														
1.8	182																														
2.2	222																														
2.7	272																														
3.3	332																														
3.9	392																														
4.7	472																														
5.6	562																														
6.8	682																														
8.2	822																														
10	103																														
12	123																														
15	153																														
18	183																														
22	223																														
27	273																														
33	333																														
39	393																														
47	473																														
56	563																														
68	683																														
82	823																														
100	104																														

Surface Mount Chip Capacitors: Tape and Reel packaging information

Tape and reel packing of surface mounting chip capacitors for automatic placement are in accordance with IEC286 part 3 and RS481

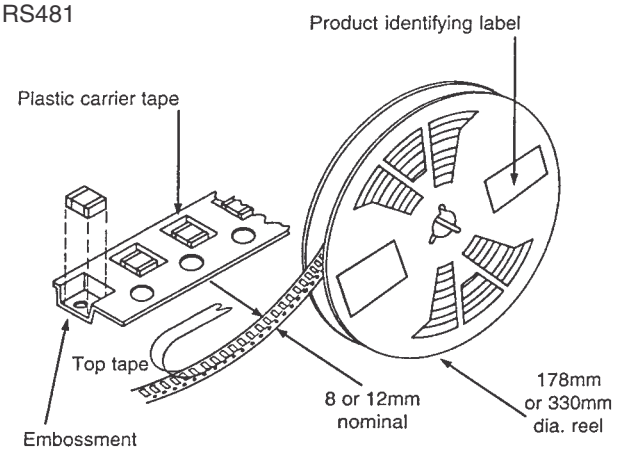

Peel force
The peel force of the top sealing tape is between 0.2 and 1.0 Newton at 1800. The breaking force of the carrier and sealing tape in the direction of unreeling is greater than 10 Newtons.

Reel dimensions mm (inches)

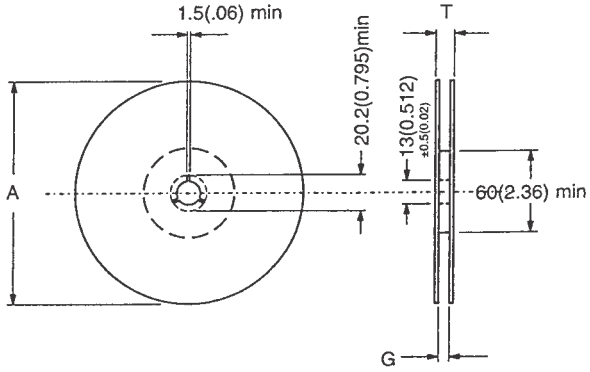

Symbol	Description	178mm reel	330mm reel
A	Reel diameter	178(7) ±2(0.079)	330(13) max
G	Reel inside with	8.4(0.33) ±1.5(0.059)-0	12.4(0.49) ±1.5(0.059)-0
T	Reel outside with	14.4(0.56) max	18.4(0.72) max

Tape dimensions mm (inches)

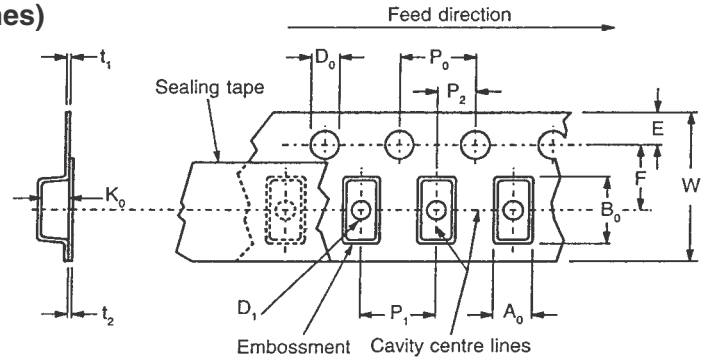

Symbol	Description	8mm tape	12mm tape
A_o B_o K_o	Width of cavity Length of cavity Depth of cavity	Dependent on chip size to minimize rotation	
W	Width of tape	8(0.315) ±0.2(0.008)	12(0.472) ±0.2(0.008)
F	Distance between drive hole centres and cavity centres	3.5(0.138) ±0.05(0.002)	5.5(0.213) ±0.05(0.002)
E	Distance between drive hole centres and tape edge	1.75(0.069) ±0.1(0.004)	
P_1	Distance between cavity centres	4(0.156) ±0.1(0.004)	8(0.315) ±0.1(0.004)
P_2	Axial distance between drive hole centres and cavity centres	2(0.079) ±0.05(0.002)	
P_o	Axial distance between drive hole centres	4(0.156) ±0.1(0.004)	
D_o	Drive hole diameter	1.5(0.059) +0.1(0.004)-0	
D_1	Diameter of cavity piercing	1(0.039) +0.1(0.004)-0	1.5(0.059) +0.1(0.004)-0
t_1	Embossed tape thickness	0.3(0.012) ±0.1(0.004)	0.4(0.016) ±0.1(0.004)
t_2	Top tape thickness	0.1(0.004) max	