Tous droits strictement reserves. Reproduction ou communication a des tiers interdite sous quelque forme que ce soit sans autorisation ecrite du propietaire. Propriete de ©BERG ELECTRONICS. Droits de reproduction BERG ELECTRONICS INC.

All rights strictly reserved. Reproduction or issue to third parties in any form whatever is not permitted without written authority from the proprietor. Property of ©BERG ELECTRONICS Copyright BERG ELECTRONICS INC.

PRODUCT NO.
SEE PRODUCT NUMBER CODE

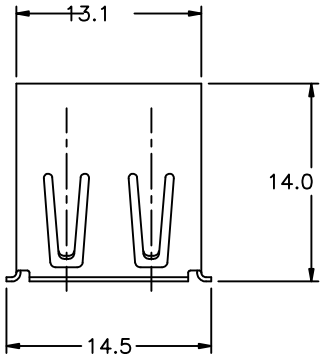

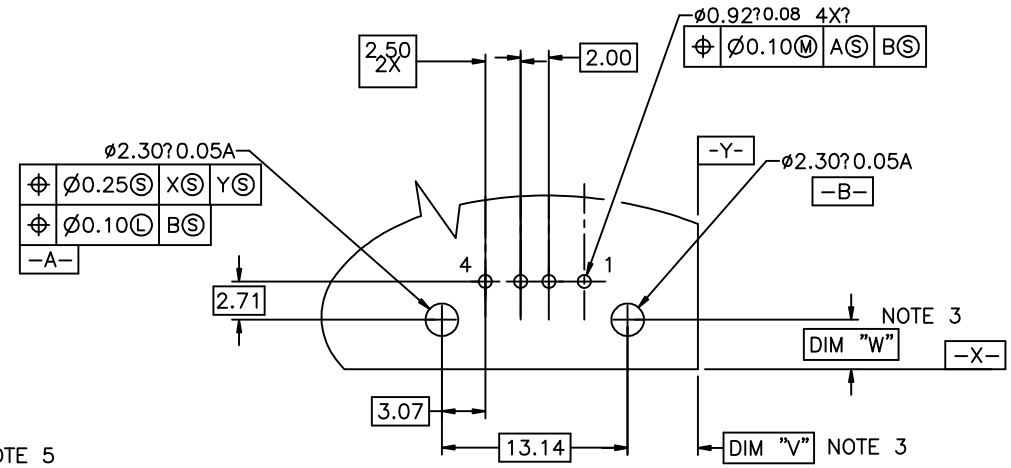

P.C. BOARD LAYOUT FOR 4 PIN 74552-X11XB

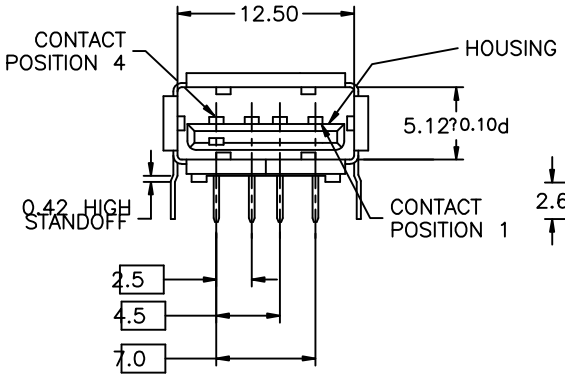

FOR 4 PIN WITHOUT TOP SCREW

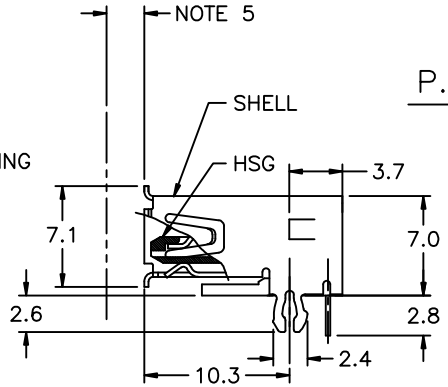

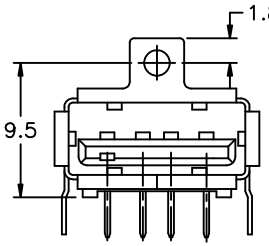

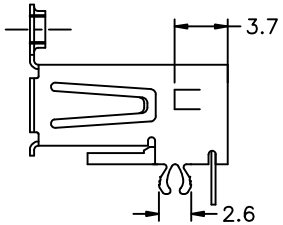

FOR 4 PIN WITH TOP SCREW

NOTES:

1. MATERIAL:
   CONTACTS: PHOSPHOR BRONZE.
   SHELL: ALLOY COPPER.
   HOUSING: UL 94V-0 RATED THERMOPLASTIC
2. PLATING:
   CONTACTS: SEE PRODUCT NUMBER CODE
   SHELL: 2.5µm BRIGHT TIN OVER NICKEL UNDERPLATE
   SEE PRODUCT NUMBER CODE
3. DATUM AND BASIC DIMENSIONS ESTABLISHED BY CUSTOMER
4. RECOMMENDED PC BOARD THICKNESS OF 1.57mm
5. 2.67mm MAXIMUM PANEL THICKNESS IF MOUNTED BEHIND PANEL
6. CONTACT PLATING CODE OPTION 1 DOES NOT MEET THE PLATING SPECIFIED PER UNIVERSAL SERIAL BUS SPECIFICATION REVISION 1.0
7. MAXIMUN PANEL THICKNESS TO BE 2.67mm IF MOUNED BEHIND PANEL.
8. TORQUE SPEC 2.0kgf-cm MAX.
9. PACKING STANDARD GS-14-920 WILL BE APPLIED FOR LEAD FREE P/N'S
10. FOR LEAD FREE P/N, THE PRODUCT MEET EUROPEAN UNION DIRECTIVES AND OTHER COUNTRY REGULATION AS DESCRIBED IN GS-22-008
11. FOR LEAD FREE P/N'S, THE HOUSING WILL WITHSTAND EXPOSURE TO 260°C PEAK TERMERATURE FOR 40 SECONDS IN A CONVECTION, INFRO-RED OR VAPOR PHASE REFLOW OVEN.

mat'l. code NOTE 1 & 2				tolerances unless otherwise specified		
ltr	ecn no	dr	date	linear	.X ±.25	
S	N06-0101	HB	04/13/06		.XX	
					.XXX	
L	T03-0518	W L	11/26/03	angles	0° ±2°	
M	T04-0044	W L	02/02/04	dr	PAMP	2/2/98
N	T04-0104	W L	03/08/04	engr	R Y LIU	2/2/98
P	T04-0206	W L	05/13/04	chr	R Y LIU	2/2/98
R	N04-0130	PH	12/22/04	appd	JENN TSAO	2/2/98
sheet index	revision sheet	R 1	N 2	R 3		

CUSTOMER COPY

projection

mm

scale 2:1

FCI www.fciconnect.com

title UNIV. SERIAL BUS REVERSER RECEPTACLE

product family USB

size A4 dwg no 74552

code –

sheet 1 of 3

cage code 22526

form no. 7530-001-103

STATUS: Released

PDM: Rev:S

Printed: Sep 26, 2007

Tous droits strictement reserves. Reproduction ou communication a des tiers interdite sous quelque forme que ce soit sans autorisation ecrite du propietaire. Propriete de ©BERG ELECTRONICS. Droits de reproduction BERG ELECTRONICS INC.

All rights strictly reserved. Reproduction or issue to third parties in any form whatever is not permitted without written authority from the proprietor. Property of ©BERG ELECTRONICS Copyright BERG ELECTRONICS INC.

PRODUCT NO.
SEE PRODUCT NUMBER CODE

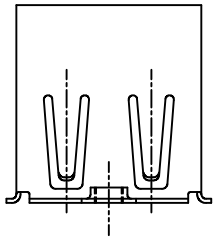

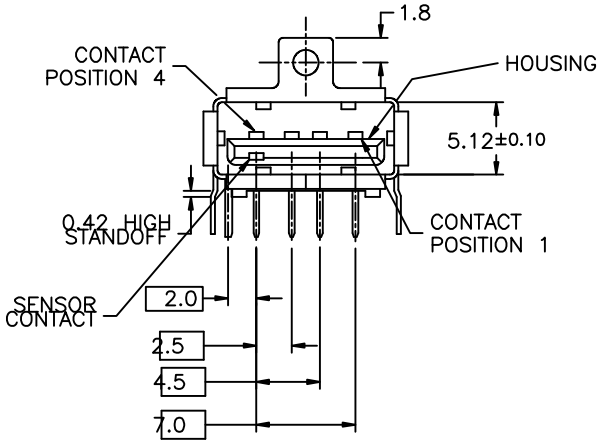

FOR 5 PIN WITH TOP SCREW

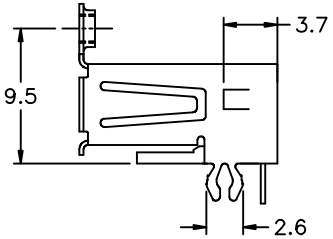

WITHOUT BACK SHIELD

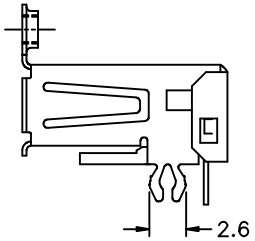

WITH BACK SHIELD

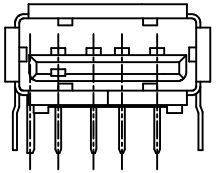

FOR 5 PIN FOR WITHOUT TOP SCREW

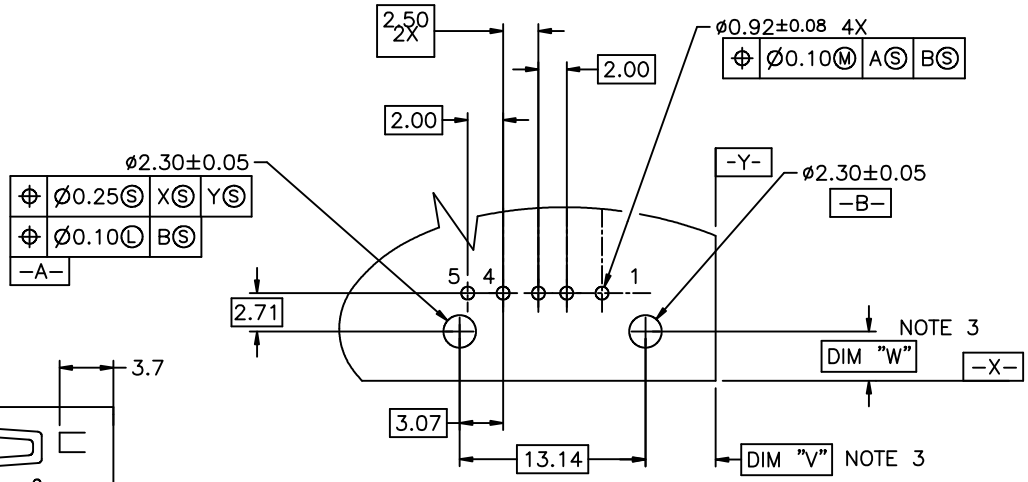

P.C. BOARD LAYOUT FOR 5 PIN 74552-X01XB

mat'l. code NOTE 1 & 2				tolerances unless otherwise specified			CUSTOMER COPY	FCI www.fciconnect.com		
ltr	ecn no	dr	date	linear	.X ±.25					
N					.XX±.20		projection	title UNIV. SERIAL BUS REVERSER RECEPTACLE		
					.XXX					
				angles	0° ±2°					
				dr	PETER	9/22/97	mm	product family USB		code –
				engr	R Y LIU	9/22/97		size A4	dwg no 74552	
				chr	R Y LIU	9/22/97	scale 2:1			sheet 2 of
				appd	JENN TSAO	9/22/97				
sheet index	revision sheet									

cage code 22526

form no. 7530-001-103

PDM: Rev:S STATUS: Released Printed: Sep 26, 2007

PRODUCT NUMBER CODE

74552 – X X X X X P S LF

BASE PRODUCT NUMBER

HOUSING COLOR OPTIONS

0 – WHITE+SHELL TIN LEAD/TIN & NICKEL PLATING
1 – BLACK+SHELL TIN LEAD/TIN & NICKEL PLATING
2 – WHITE+SHELL NICKEL PLATING ONLY
3 – BLACK+SHELL NICKEL PLATING ONLY
4 – WHITE+SHELL TIN LEAD/TIN & NICKEL PLATING

SENSOR CONTACT OPTION

0 – WITH SENSOR CONTACT & WITH TOP SCREW MOUNT(HSG PCT)
1 – WITHOUT SENSOR CONTACT & WITHOUT TOP SCREW MOUNT
2 – WITHOUT SENSOR CONTACT & WITH TOP SCREW MOUNT
3 – WITH SENSOR CONTACT & WITH TOP SCREW MOUNT(HSG NYLON 66)

SHELL OPTIONS

1 – WITHOUT BACK SHIELD
2 – WITH BACK SHIELD
3 – WITHOUT BACK SHIELD & BOARD LOCKS INSERTING FORCE UNDER 2Kgf

TERMINAL PLATING OPTION

0 –1.25um Ni UNDERPLATE
0.76um GXT CONTACT AREA
2.50 um TIN/LEAD TAIL AREA FOR P/N'S WITHOUT SUFFIX "LF"
2.50 um PURE TIN TAIL AREA FOR P/N'S WITH SUFFIX "LF"
1 –1.25um Ni UNDERPLATE
GOLD FLASH CONTACT AREA FOR P/N'S WITHOUT SUFFIX "LF"
0.76um GXT CONTACT AREA FOR P/N'S WITH SUFFIX "LF"
2.50um TIN/LEAD TAIL AREA FOR P/N'S WITHOUT SUFFIX "LF"
2.50 um PURE TIN TAIL AREA FOR P/N'S WITH SUFFIX "LF"

PACKAGING OPTION

B – TUBES

DATE CODE

ONLY FOR PANASONIC

LEAD FREE OPTION
WHEN SENSOR CONTACT OPTION IS "1" OR "2"

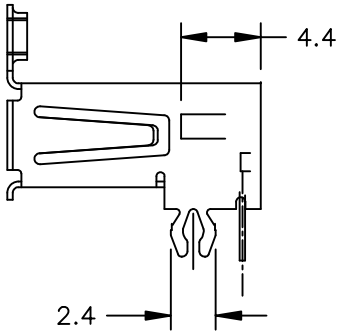

INSERTING FORCE TO PCB 2Kgf MAX.
& DURABILITY 5000 CYCLES
P/N 74552–3230BX

mat'l. code NOTE 1 & 2				tolerances unless otherwise specified			CUSTOMER COPY	FCI www.fciconnect.com	
ltr	ecn no	dr	date	linear	.X ±.25		projection	title UNIV. SERIAL BUS REVERSER RECEPTACLE	
S					.XX ±.20				
					.XXX				
				angles	0° ±2°				
				dr	PETER PAM	9/22/97	mm	product family USB	code –
				engr	R Y LIU	9/22/97		size A4 dwg no 74552	
				chr	R Y LIU	9/22/97	scale 4 : 1		sheet 3 of
				appd	JENN TSAO	9/22/97			
sheet index	revision sheet								

cage code 22526

form no. 7530–001–103

Tous droits strictement reserves. Reproduction ou communication a des tiers interdite sous quelque forme que ce soit sans autorisation ecrite du propietaire. Propriete de ©BERG ELECTRONICS. Droits de reproduction BERG ELECTRONICS INC.

All rights strictly reserved. Reproduction or issue to third parties in any form whatever is not permitted without written authority from the proprietor. Property of ©BERG ELECTRONICS Copyright BERG ELECTRONICS INC.

Printed: Sep 26, 2007 STATUS: Released RDM: Rev:S