Crystal Units
Surface Mount Type CX8045JA (CX-17F)

KYOCERA

8.0×4.5mm for Automotive

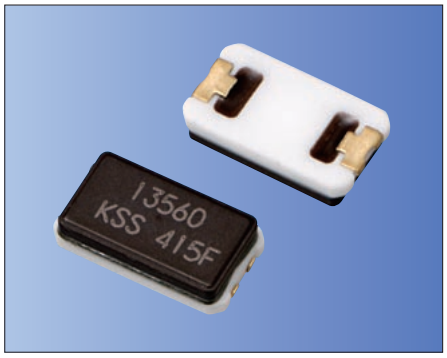

RoHS Compliant

Features

- Crystal unit for automotive electronics
- Small and low profile (8.0×4.5×1.9mm)
- Ceramic package, J lead type
- Product with lead free terminations
- Reflow compatible
- AEC-Q200 certified

Applications

- ECU, TPMS

How to Order

CX8045JA 08000 □□ □ □ □ □□
① ② ③ ④ ⑤ ⑥ ⑦

① Series ② Frequency

③ Load Capacitance

H0	12 pF	Std.

④ Frequency Stability

P	±50×10⁻⁶	—
Q	±100×10⁻⁶	Std.

⑤Operating Temp. Range ⑥Frequency Temp. Stability

SW	−40 to +125°C	±200×10⁻⁶	Std.

⑦ Individual Specification... Std.Spec. as "ZZ"

Specifications

Item	Symbol	Specification	Units	Remarks
Frequency Range	f_{nom}	8000 to 30000	kHz	
Overtone Order	OT	Fundamental	—	
Load Capacitance	CL	12	pF	
Frequency Stability	f_{tol}	±100	$\times 10^{-6}$	@ 25°C
Motional Series Resistance	R1	Table 1	ohm	
Drive Level	DL	Table 2	μW	
Operating Temp. Range	T_{use}	−40 to +125	°C	
Storage Temp. Range	T_{stg}	−40 to +150	°C	
Frequency Temp. Characteristics	f_{tem}	±200	$\times 10^{-6}$	ref.@ 25°C over operating temperature range

∗ Please contact us for other specifications.

Typical Frequencies and Part Numbers

Frequency (kHz)	Standard Part Number
8000.000	CX8045JA08000H0QSWZZ
9843.750	CX8045JA09843H0QSWZZ
10000.000	CX8045JA10000H0QSWZZ
12000.000	CX8045JA12000H0QSWZZ
13560.000	CX8045JA13560H0QSWZZ
14000.000	CX8045JA14000H0QSWZZ
16000.000	CX8045JA16000H0QSWZZ
18000.000	CX8045JA18000H0QSWZZ
20000.000	CX8045JA20000H0QSWZZ
24000.000	CX8045JA24000H0QSWZZ
25000.000	CX8045JA25000H0QSWZZ
30000.000	CX8045JA30000H0QSWZZ

Table1 Motional Series Resistance

Frequency Range	Motional Series Resistance	Units
8000 to 9999kHz	200 max.	ohm
10000 to 11999kHz	150 max.	
12000 to 30000kHz	50 max.	

Table2 Level of Drive

Frequency Range	Drive Level	Units
8000 to 15999kHz	10 (500 max.)	μW
16000 to 24999kHz	10 (300 max.)	
25000 to 30000kHz	10 (100 max.)	

Dimensions

(Unit: mm)

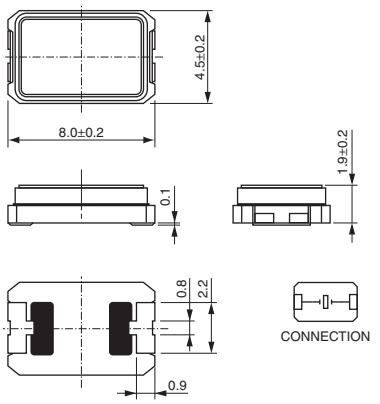

Recommended Land Pattern
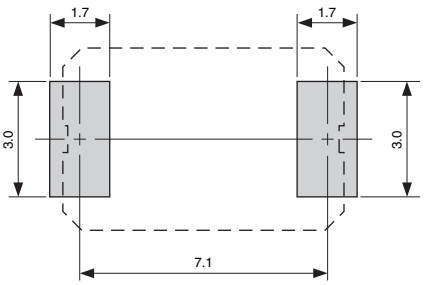
(Unit: mm)