REVISIONS			
LTR	DESCRIPTION	DATE (YR-MO-DA)	APPROVED
A	Figure 1; Conversion table. For case outline T changed dimension s from .240 inches min and .260 inches max to .245 min and .255 inches max. -sld	99-06-07	K.A. Cottongim

REV																				
SHEET																				
REV	A																			
SHEET	15																			

REV STATUS OF SHEETS																
	REV	A	A	A	A	A	A	A	A	A	A	A	A	A	A
	SHEET	1	2	3	4	5	6	7	8	9	10	11	12	13	14

PMIC N/A

STANDARD MICROCIRCUIT DRAWING

THIS DRAWING IS AVAILABLE FOR USE BY ALL DEPARTMENTS AND AGENCIES OF THE DEPARTMENT OF DEFENSE

AMSC N/A

PREPARED BY
Steve L. Duncan

CHECKED BY
Michael Jones

APPROVED BY
Kendall A. Cottongim

DRAWING APPROVAL DATE
99-05-18

REVISION LEVEL
A

DEFENSE SUPPLY CENTER COLUMBUS
P. O. BOX 3990
COLUMBUS, OHIO 43216-5000

MICROCIRCUIT, HYBRID, LINEAR, 5 VOLT, SINGLE CHANNEL, DC/DC CONVERTER

SIZE	CAGE CODE	
A	**67268**	**5962-99548**

SHEET 1 OF 15

DSCC FORM 2233
APR 97

5962-E319-99

DISTRIBUTION STATEMENT A. Approved for public release; distribution is unlimited.

Powered by ICminer.com Electronic-Library Service CopyRight 2003

1. SCOPE

1.1 Scope. This drawing documents five product assurance classes, class D (lowest reliability), class E, (exceptions), class G (lowest high reliability), class H (high reliability), and class K, (highest reliability) and a choice of case outlines and lead finishes are available and are reflected in the Part or Identifying Number (PIN). When available, a choice of radiation hardness assurance levels are reflected in the PIN.

1.2 PIN. The PIN shall be as shown in the following example:

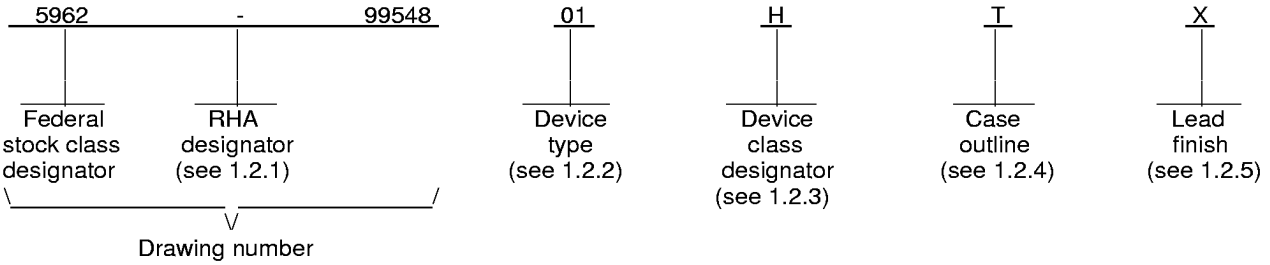

1.2.1 Radiation hardness assurance (RHA) designator. Device classes H and K RHA marked devices shall meet the MIL-PRF-38534 specified RHA levels and shall be marked with the appropriate RHA designator. A dash (-) indicates a non-RHA device.

1.2.2 Device type(s). The device type(s) shall identify the circuit function as follows:

Device type	Generic number	Circuit function
01	MOR2805S/883	DC-DC Converter, 100 W, 5 V output

1.2.3 Device class designator. This device class designator shall be a single letter identifying the product assurance level as follows:

Device class	Device performance documentation
D, E, G, H or K	Certification and qualification to MIL-PRF-38534

1.2.4 Case outline(s). The case outline(s) shall be as designated in MIL-STD-1835 and as follows:

Outline letter	Descriptive designator	Terminals	Package style
T	See figure 1	12	Tabbed flange mount, lead formed up
U	See figure 1	12	Flange mount, lead formed down
X	See figure 1	12	Flange mount, short lead
Y	See figure 1	12	Tabbed flange mount, short lead
Z	See figure 1	12	Tabbed flange mount, lead formed down

1.2.5 Lead finish. The lead finish shall be as specified in MIL-PRF-38534.

Powered by ICminer.com Electronic-Library Service CopyRight 2003

1.3 Absolute maximum ratings. 1/

Input voltage range (V_{IN})	-0.5 V dc to +50 V dc 2/
Power dissipation (P_D)	30 W
Lead soldering temperature (10 seconds)	+300°C
Storage temperature range	-65°C to +150°C

1.4 Recommended operating conditions.

Input voltage range (V_{IN})	+16 V dc to +40 V dc
Output power	100 W
Case operating temperature range (T_C)	-55°C to +125°C

2. APPLICABLE DOCUMENTS

2.1 Government specification, standards, and handbook. The following specification, standards, and handbook form a part of this drawing to the extent specified herein. Unless otherwise specified, the issues of these documents are those listed in the issue of the Department of Defense Index of Specifications and Standards (DoDISS) and supplement thereto, cited in the solitation.

SPECIFICATION

DEPARTMENT OF DEFENSE

MIL-PRF-38534 - Hybrid Microcircuits, General Specification for

STANDARDS

DEPARTMENT OF DEFENSE

MIL-STD-883 - Test Methods and Procedures for Microelectronics
MIL-STD-973 - Configuration Management
MIL-STD-1835 - Microcircuit Case Outlines

HANDBOOK

DEPARTMENT OF DEFENSE

MIL-HDBK-780 - Standard Microcircuit Drawings

(Unless otherwise indicated, copies of the specification, standards, and handbook are available from the Standardization Document Order Desk, 700 Robbins Avenue, Building 4D, Philadelphia, PA 19111-5094.)

2.2 Order of precedence. In the event of a conflict between the text of this drawing and the references cited herein, the text of this drawing takes precedence. Nothing in this document, however, supersedes applicable laws and regulations unless a specific exemption has been obtained.

1/ Stresses above the absolute maximum rating may cause permanent damage to the device. Extended operation at the maximum levels may degrade performance and affect reliability.
2/ An undervoltage lockout circuit shuts the unit off when the input voltage drops to approximately 14.5 volts. Operation of the unit between 14.5 volts and 16 volts is non-destructive, but performance is not guaranteed.

Powered by ICminer.com Electronic-Library Service CopyRight 2003

3. REQUIREMENTS

3.1 Item requirements. The individual item performance requirements for device classes D, E, G, H, and K shall be in accordance with MIL-PRF-38534. Compliance with MIL-PRF-38534 may include the performance of all tests herein or as designated in the device manufacturer's Quality Management (QM) plan or as designated for applicable device class. Therefore, the tests and inspections herein may not be performed for applicable device class (see MIL-PRF-38534). Futhermore, the manufacturers may take exceptions or use alternate methods to the tests and inspections herein and not perform them. However, the performance requirements as defined in MIL-PRF-38534 shall be met for the applicable device class. The modification in the QM plan shall not affect the form, fit, or function as described herein.

3.2 Design, construction, and physical dimensions. The design, construction, and physical dimensions shall be as specified in MIL-PRF-38534 and herein.

3.2.1 Case outline(s). The case outline(s) shall be in accordance with 1.2.4 herein and figure 1.

3.2.2 Terminal connections. The terminal connections shall be as specified on figure 2.

3.3 Electrical performance characteristics. Unless otherwise specified herein, the electrical performance characteristics are as specified in table I and shall apply over the full specified operating temperature range.

3.4 Electrical test requirements. The electrical test requirements shall be the subgroups specified in table II. The electrical tests for each subgroup are defined in table I.

3.5 Marking of Device(s). Marking of device(s) shall be in accordance with MIL-PRF-38534. The device shall be marked with the PIN listed in 1.2 herein. In addition, the manufacturer's vendor similar PIN may also be marked as listed in QML-38534.

3.6 Data. In addition to the general performance requirements of MIL-PRF-38534, the manufacturer of the device described herein shall maintain the electrical test data (variables format) from the initial quality conformance inspection group A lot sample, for each device type listed herein. Also, the data should include a summary of all parameters manually tested, and for those which, if any, are guaranteed. This data shall be maintained under document revision level control by the manufacturer and be made available to the preparing activity (DSCC-VA) upon request.

3.7 Certificate of compliance. A certificate of compliance shall be required from a manufacturer in order to supply to this drawing. The certificate of compliance (original copy) submitted to DSCC-VA shall affirm that the manufacturer's product meets the performance requirements of MIL-PRF-38534 and herein.

3.8 Certificate of conformance. A certificate of conformance as required in MIL-PRF-38534 shall be provided with each lot of microcircuits delivered to this drawing.

4. QUALITY ASSURANCE PROVISIONS

4.1 Sampling and inspection. Sampling and inspection procedures shall be in accordance with MIL-PRF-38534 or as modified in the device manufacturer's Quality Management (QM) plan. The modification in the QM plan shall not affect the form, fit, or function as described herein.

4.2 Screening. Screening shall be in accordance with MIL-PRF-38534. The following additional criteria shall apply:

a. Burn-in test, method 1015 of MIL-STD-883.

(1) Test condition A, B, C, or D. The test circuit shall be maintained by the manufacturer under document revision level control and shall be made available to either DSCC-VA or the acquiring activity upon request. Also, the test circuit shall specify the inputs, outputs, biases, and power dissipation, as applicable, in accordance with the intent specified in test method 1015 of MIL-STD-883.

(2) T_A as specified in accordance with table I of method 1015 of MIL-STD-883.

b. Interim and final electrical test parameters shall be as specified in table II herein, except interim electrical parameter tests prior to burn-in are optional at the discretion of the manufacturer.

Powered by ICminer.com Electronic-Library Service CopyRight 2003

TABLE I. Electrical performance characteristics.

Test	Symbol	Conditions $-55°C \le T_C \le +125°C$ V_{IN} = 28 V dc ±0.5 V dc no external sync, C_L = 0 unless otherwise specified	Group A subgroups	Device type	Limits Min	Limits Max	Unit
Output voltage	V_{OUT}	I_{OUT} = 20 A dc	1	01	4.95	5.05	V
			2, 3		4.875	5.125	
Output current	I_{OUT}	V_{IN} = 16 V, 28 V, and 40 V dc	1, 2, 3	01		20	A
Output ripple voltage	V_{RIP}	I_{OUT} = 20 A, BW = 10 kHz to 20 MHz	1	01		70	mV p-p
			2, 3			80	
Line regulation	VR_{LINE}	I_{OUT} = 20 A, V_{IN} = 16 V dc to 40 V dc	1, 2, 3	01		20	mV
Load regulation	VR_{LOAD}	I_{OUT} = 0 to 20 A	1, 2, 3	01		20	mV
Input current	I_{IN}	I_{OUT} = 0 A, inhibit 1 (pin 4) = 0	1, 2, 3	01		10	mA
		I_{OUT} = 0 A, inhibit 2 (pin 12) = 0				70	
		I_{OUT} = 0 A, inhibit 1 and 2 (pins 4 and 12) = open				150	
Input ripple current	I_{RIP}	I_{OUT} = 20 A, BW = 10 kHz to 20 MHz	1	01		120	mA p-p
			2, 3			130	
Efficiency	Eff	I_{OUT} = 20 A	1	01	78		%
			2, 3		77		
Isolation	ISO	Input to output or any pin to case at 500 V dc	1	01	100		MΩ
Capacitive load 1/ 2/	C_L	No effect on dc performance	4	01		1000	µF

See footnotes at end of table.

Powered by ICminer.com Electronic-Library Service CopyRight 2003

TABLE I. Electrical performance characteristics - Continued.

Test	Symbol	Conditions $-55°C \le T_C \le +125°C$ V_{IN} = 28 V dc ±0.5 V dc no external sync, C_L = 0 unless otherwise specified	Group A subgroups	Device type	Limits		Unit
					Min	Max	
Power dissipation short circuit	P_D	Short circuit	1, 2, 3	01		27	W
Switching frequency	F_S	I_{OUT} = 20 A	4	01	480	580	kHz
			5, 6		460	600	
External sync range 3/	F_{SYNC}	I_{OUT} = 20 A, TTL level to pin 6	4, 5, 6	01	525	625	kHz
Output response to step transient load changes 4/	VT_{LOAD}	50 percent load to/from 100 percent load	4, 5, 6	01	-250	+250	mV pk
Recovery time step transient load changes 2/ 4/ 5/	TT_{LOAD}	50 percent load to/from 100 percent load	4, 5, 6	01		200	µs
Output response to transient step line changes 2/ 6/	VT_{LINE}	I_{OUT} = 20 A, Input step from 16 V dc to 40 V dc	4, 5, 6	01	-400	+400	mV pk
		I_{OUT} = 20 A, Input step from 40 V dc to 16 V dc			-400	+400	
Recovery time, transient step line changes 2/ 5/	TT_{LINE}	I_{OUT} = 20 A, Input step from 16 V dc to 40 V dc	4, 5, 6	01		300	µs
		I_{OUT} = 20 A, Input step from 40 V dc to 16 V dc				300	
Turn-on overshoot 3/	$Vton_{OS}$	I_{OUT} = 20 A, V_{IN} = 0 to 28 V dc	4, 5, 6	01		50	mV pk
Turn-on delay time 7/	Ton_D	I_{OUT} = 20 A, V_{IN} = 0 to 40 V dc	4, 5, 6	01		10	ms
Load fault recovery 2/	Tr_{LF}	I_{OUT} = 20 A	4, 5, 6	01		10	ms

See footnotes at top of next page.

Powered by ICminer.com Electronic-Library Service CopyRight 2003

TABLE I. Electrical performance characteristics - Continued.

1/ Capacitive load may be any value from 0 to the maximum limit without compromising dc performance.

2/ Parameter shall be tested as part of design characterization and after design or process changes; therefore, the parameter shall be guaranteed to limits specified in table I.

3/ A TTL level waveform (V_{IH} = 4.5 V minimum, V_{IL} = 0.8 V maximum) with a 50 percent ±10 percent duty cycle applied to the sync input pin (pin 6) within the the sync range frequency shall cause the converter's switching frequency to become synchronous with the frequency applied to the sync input pin (pin 6).

4/ Load step transition time is 10 microseconds minimum.

5/ Recovery time is measured from the initiation of the transient until V_{OUT} has returned to within ±1 percent of its final value.

6/ Input step transition time greater than 10 microseconds.

7/ Turn-on delay time measurement is either for a step application of power at the input or the removal of a ground signal from the inhibit 1 pin (pin 4) or inhibit 2 pin (pin 12) while power is applied to the input

Powered by ICminer.com Electronic-Library Service CopyRight 2003

Case outline T

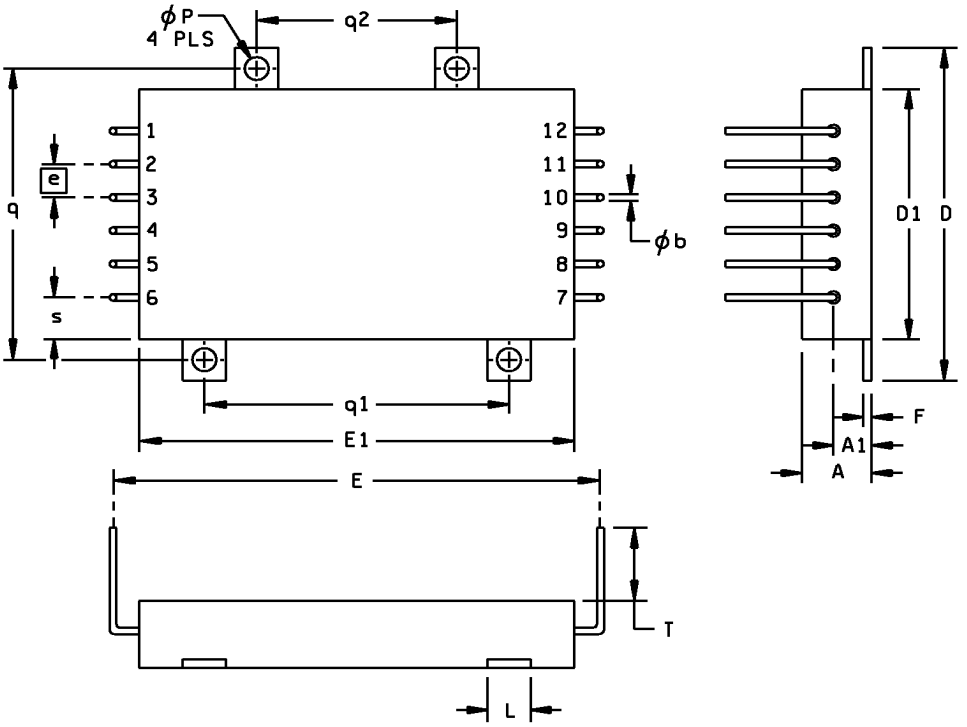

Symbol	Millimeters		Inches	
	Min	Max	Min	Max
A		10.16		.400
A1	5.33	5.84	.210	.230
ϕb	0.89	1.14	.035	.045
D	50.55	51.05	1.990	2.010
D1	37.85	38.35	1.490	1.510
e	5.08 BSC		.200 BSC	
E	69.85	72.39	2.750	2.850
E1	63.25	63.75	2.490	2.510
F	1.14	1.40	.045	.055
L	6.10	6.60	.240	.260
ϕP	3.43	3.68	.135	.145
q/q1	44.32	44.58	1.745	1.755
q2	29.08	29.34	1.145	1.155
s	6.22	6.48	.245	.255
T	9.91	12.45	.390	.490

NOTES:
1. The U. S. preferred system of measurement is the metric SI. This case outline was originally designed using inch-pound units of measurement, in the event of conflict between the metric and inch-pound units, the inch-pound shall take precedence.
2. Device weight: 110 grams maximum.

FIGURE 1. Case outline(s).

Powered by ICminer.com Electronic-Library Service CopyRight 2003

Case outline U

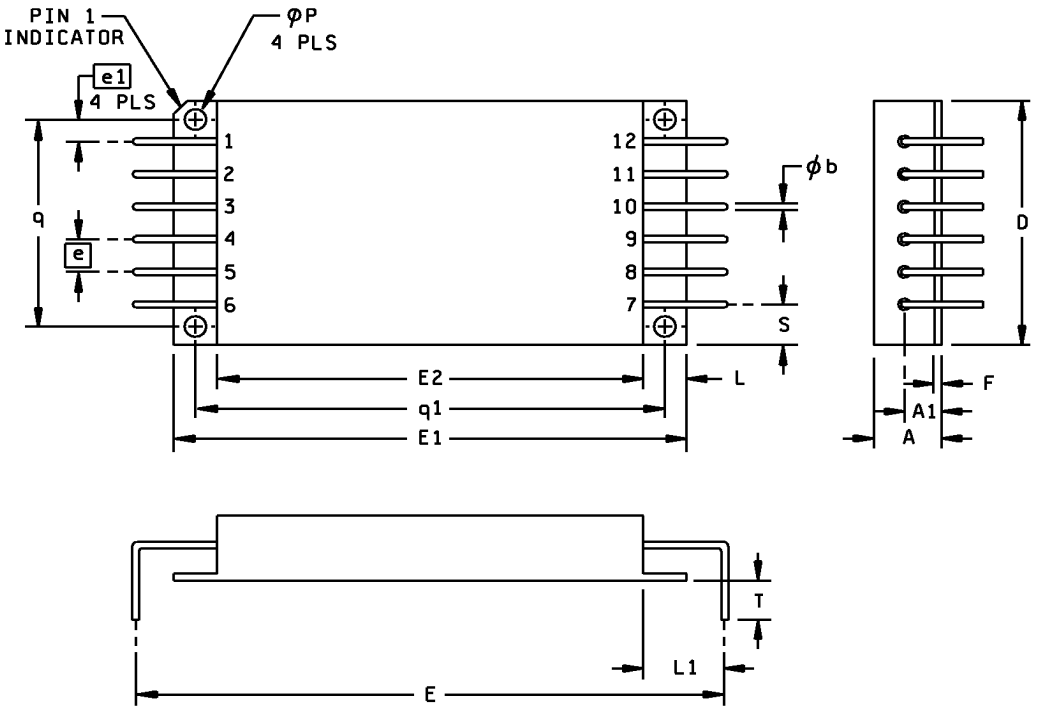

Symbol	Millimeters		Inches	
	Min	Max	Min	Max
A		10.16		.400
A1	4.95	6.22	.195	.245
φb	0.89	1.14	.035	.045
D	37.72	38.23	1.485	1.505
e	5.08 BSC		.200 BSC	
e1	3.30 BSC		.130 BSC	
E	87.38	87.88	3.440	3.460
E1	75.82	76.33	2.985	3.005
E2	63.37	63.63	2.495	2.505
F	1.14	1.40	.045	.055
L	6.10	6.60	.240	.260
L1	11.81	12.32	.465	.485
φP	3.12	3.38	.123	.133
q	31.88	32.13	1.255	1.265
q1	69.98	70.23	2.755	2.765
S	6.22	6.48	.245	.255
T	5.08	7.62	.200	.300

NOTES:
1. The U. S. preferred system of measurement is the metric SI. This case outline was originally designed using inch-pound units of measurement, in the event of conflict between the metric and inch-pound units, the inch-pound shall take precedence.
2. Device weight: 110 grams maximum.

FIGURE 1. Case outline(s) - Continued.

Powered by ICminer.com Electronic-Library Service CopyRight 2003

Case outline X

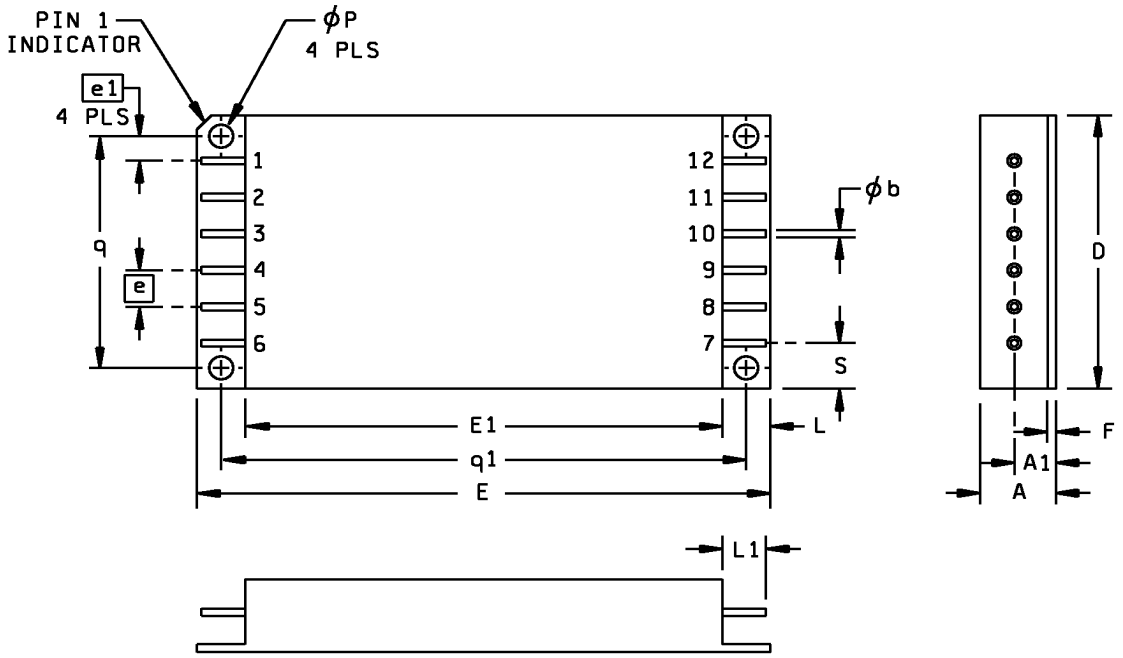

Symbol	Millimeters		Inches	
	Min	Max	Min	Max
A		10.16		.400
A1	5.33	5.84	.210	.230
ϕb	0.89	1.14	.035	.045
D	37.72	38.23	1.485	1.505
e	5.08 BSC		.200 BSC	
e1	3.30 BSC		.130 BSC	
E	75.82	76.33	2.985	3.005
E1	63.37	63.63	2.495	2.505
F	1.14	1.40	.045	.055
L	6.10	6.60	.240	.260
L1	6.35	8.89	.250	.350
ϕP	3.12	3.38	.123	.133
q	31.88	32.13	1.255	1.265
q1	69.98	70.23	2.755	2.765
S	6.22	6.48	.245	.255

NOTES:
1. The U. S. preferred system of measurement is the metric SI. This case outline was originally designed using inch-pound units of measurement, in the event of conflict between the metric and inch-pound units, the inch-pound shall take precedence.
2. Device weight: 110 grams maximum.

FIGURE 1. Case outline(s) - Continued.

Powered by ICminer.com Electronic-Library Service CopyRight 2003

Case outline Y

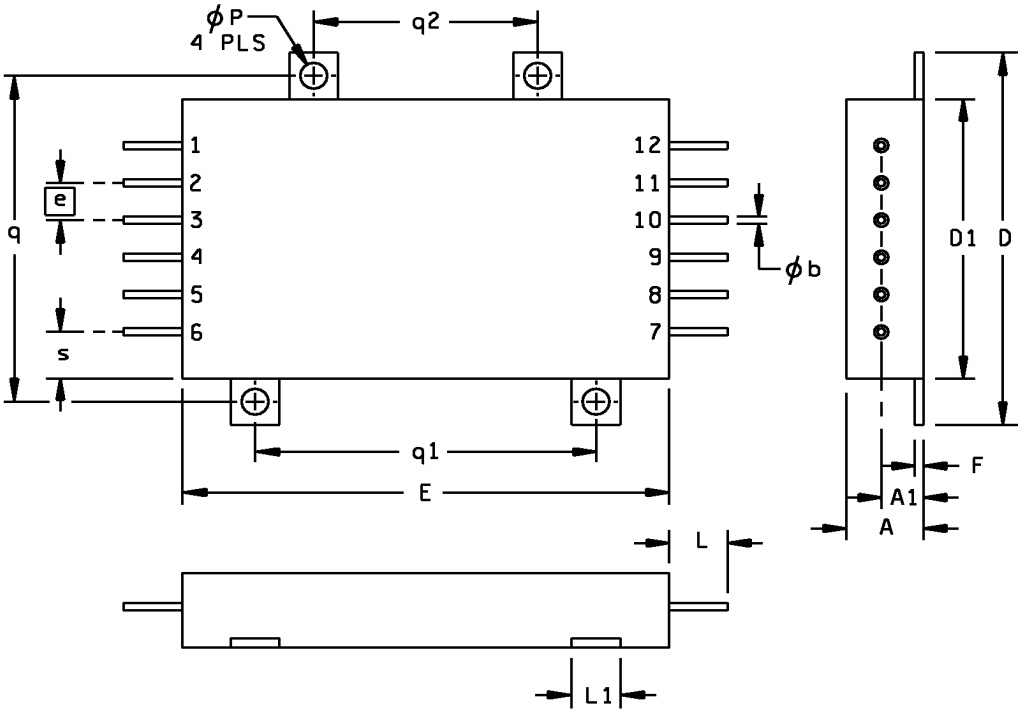

Symbol	Millimeters		Inches	
	Min	Max	Min	Max
A		10.16		.400
A1	5.33	5.84	.210	.230
ϕb	0.89	1.14	.035	.045
D	50.55	51.05	1.990	2.010
D1	37.85	38.35	1.490	1.510
e	5.08 BSC		.200 BSC	
E	63.25	63.75	2.490	2.510
F	1.14	1.40	.045	.055
L	6.35	8.89	.250	.350
L1	6.10	6.60	.240	.260
ϕP	3.43	3.68	.135	.145
q/q1	44.32	44.58	1.745	1.755
q2	29.08	29.34	1.145	1.155
s	6.22	6.48	.245	.255

NOTES:
1. The U. S. preferred system of measurement is the metric SI. This case outline was originally designed using inch-pound units of measurement, in the event of conflict between the metric and inch-pound units, the inch-pound shall take precedence.
2. Device weight: 110 grams maximum.

FIGURE 1. Case outline(s) - Continued.

Powered by ICminer.com Electronic-Library Service CopyRight 2003

Case outline Z

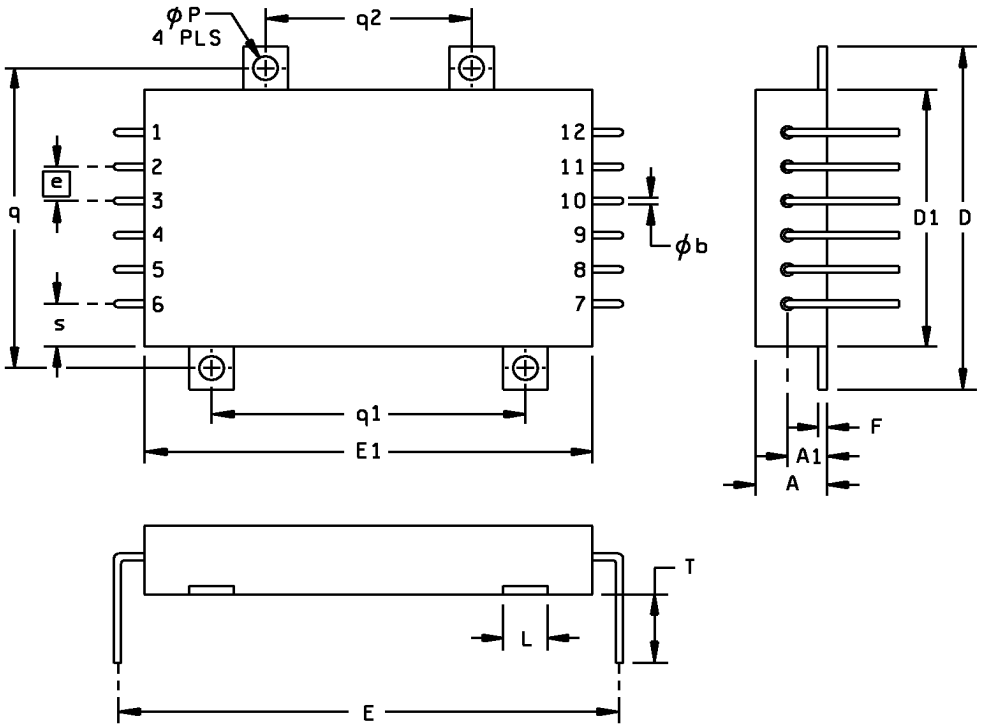

Symbol	Millimeters		Inches	
	Min	Max	Min	Max
A		10.16		.400
A1	5.33	5.84	.210	.230
ϕb	0.89	1.14	.035	.045
D	50.55	51.05	1.990	2.010
D1	37.85	38.35	1.490	1.510
e	5.08 BSC		0.200 BSC	
E	69.85	72.39	2.750	2.850
E1	63.25	63.75	2.490	2.510
F	1.14	1.40	.045	.055
L	6.10	6.60	.240	.260
ϕP	3.43	3.68	.135	.145
q/q1	44.32	44.58	1.745	1.755
q2	29.08	29.34	1.145	1.155
s	6.22	6.48	.245	.255
T	7.87	10.41	.310	.410

NOTES:
1. The U. S. preferred system of measurement is the metric SI. This case outline was originally designed using inch-pound units of measurement, in the event of conflict between the metric and inch-pound units, the inch-pound shall take precedence.
2. Device weight: 110 grams maximum.

FIGURE 1. Case outline(s) - Continued.

Powered by ICminer.com Electronic-Library Service CopyRight 2003

Device type	01
Case outlines	T, U, X, Y, and Z
Terminal number	Terminal symbol
1	Input
2	Input return
3	Trim
4	Inhibit 1
5	Sync output
6	Sync input
7	Positive output
8	Output return
9	Remote sense return
10	Positive remote sense
11	Share
12	Inhibit 2

FIGURE 2. Terminal connections.

Powered by ICminer.com Electronic-Library Service CopyRight 2003

TABLE II. Electrical test requirements.

MIL-PRF-38534 test requirements	Subgroups (in accordance with MIL-PRF-38534, group A test table)
Interim electrical parameters	---
Final electrical parameters	1*, 2, 3, 4, 5, 6
Group A test requirements	1, 2, 3, 4, 5, 6
Group C end-point electrical parameters	1
MIL-STD-883, group E end-point electrical parameters for RHA devices	Subgroups** (in accordance with method 5005, group A test table)

* PDA applies to subgroup 1.
** When applicable to this standard microcircuit drawing, the subgroups shall be defined.

4.3 Conformance and periodic inspections. Conformance inspection (CI) and periodic inspection (PI) shall be in accordance with MIL-PRF-38534 and as specified herein.

4.3.1 Group A inspection (CI). Group A inspection shall be in accordance with MIL-PRF-38534 and as follows:

a. Tests shall be as specified in table II herein.

b. Subgroups 7, 8, 9, 10, and 11 shall be omitted.

4.3.2 Group B inspection (PI). Group B inspection shall be in accordance with MIL-PRF-38534.

4.3.3 Group C inspection (PI). Group C inspection shall be in accordance with MIL-PRF-38534 and as follows:

a. End-point electrical parameters shall be as specified in table II herein.

b. Steady-state life test, method 1005 of MIL-STD-883.

(1) Test condition A, B, C, or D. The test circuit shall be maintained by the manufacturer under document revision level control and shall be made available to either DSCC-VA or the acquiring activity upon request. Also, the test circuit shall specify the inputs, outputs, biases, and power dissipation, as applicable, in accordance with the intent specified in test method 1005 of MIL-STD-883.

(2) T_A as specified in accordance with table I of method 1005 of MIL-STD-883.

(3) Test duration: 1,000 hours, except as permitted by method 1005 of MIL-STD-883.

Powered by ICminer.com Electronic-Library Service CopyRight 2003

4.3.4 Group D inspection (PI). Group D inspection shall be in accordance with MIL-PRF-38534.

4.3.5 Group E inspection. Group E inspection is required only for parts intended to be marked as radiation hardness assured (see 3.5 herein). RHA levels for device classes H and K shall be M, D, R, and H. RHA quality conformance inspection sample tests shall be performed at the RHA level specified in the acquisition document.

a. RHA tests for device classes H and K for levels M, D, R, and H shall be performed through each level to determine at what levels the devices meet the RHA requirements. These RHA tests shall be performed for initial qualification and after design or process changes which may affect the RHA performance of the device.

b. End-point electrical parameters shall be as specified in table II herein.

c. Prior to total dose irradiation, each selected sample shall be assembled in its qualified package. It shall pass the specified group A electrical parameters in table I for subgroups specified in table II herein.

d. For device classes H and K, the devices shall be subjected to radiation hardness assured tests as specified in MIL-PRF-38534 for RHA level being tested, and meet the postirradiation end-point electrical parameter limits as defined in table I at T_A = +25°C ±5 percent, after exposure.

e. Prior to and during total dose irradiation testing, the devices shall be biased to establish a worst case condition as specified in the radiation exposure circuit.

f. For device classes H and K, subgroups 1 and 2 in table V, method 5005 of MIL-STD-883 shall be tested as appropriate for device construction.

g. When specified in the purchase order or contract, a copy of the RHA delta limits shall be supplied.

5. PACKAGING

5.1 Packaging requirements. The requirements for packaging shall be in accordance with MIL-PRF-38534.

6. NOTES

6.1 Intended use. Microcircuits conforming to this drawing are intended for use for Government microcircuit applications (original equipment), design applications, and logistics purposes.

6.2 Replaceability. Microcircuits covered by this drawing will replace the same generic device covered by a contractor-prepared specification or drawing.

6.3 Configuration control of SMD's. All proposed changes to existing SMD's will be coordinated with the users of record for the individual documents. This coordination will be accomplished in accordance with MIL-STD-973 using DD Form 1692, Engineering Change Proposal.

6.4 Record of users. Military and industrial users shall inform Defense Supply Center Columbus when a system application requires configuration control and the applicable SMD. DSCC will maintain a record of users and this list will be used for coordination and distribution of changes to the drawings. Users of drawings covering microelectronic devices (FSC 5962) should contact DSCC-VA, telephone (614) 692-0526.

6.5 Comments. Comments on this drawing should be directed to DSCC-VA, P. O. Box 3990, Columbus, Ohio 43216-5000, or telephone (614) 692-0512.

6.6 Sources of supply. Sources of supply are listed in QML-38534. The vendors listed in QML-38534 have submitted a certificate of compliance (see 3.7 herein) to DSCC-VA and have agreed to this drawing.

Powered by ICminer.com Electronic-Library Service CopyRight 2003

STANDARD MICROCIRCUIT DRAWING SOURCE APPROVAL BULLETIN

DATE: 99-06-07

Approved sources of supply for SMD 5962-99548 are listed below for immediate acquisition only and shall be added to QML-38534 during the next revision. QML-38534 will be revised to include the addition or deletion of sources. The vendors listed below have agreed to this drawing and a certificate of compliance has been submitted to and accepted by DSCC-VA. This bulletin is superseded by the next dated revision of QML-38534.

Standard microcircuit drawing PIN 1/	Vendor CAGE number	Vendor similar PIN 2/
5962-9954801HTA 5962-9954801HTC	50821 50821	MOR2805SW/883 MOR2805SW/883
5962-9954801HUA 5962-9954801HUC	50821 50821	MOR2805SV/883 MOR2805SV/883
5962-9954801HXA 5962-9954801HXC	50821 50821	MOR2805S/883 MOR2805S/883
5962-9954801HYA 5962-9954801HYC	50821 50821	MOR2805SY/883 MOR2805SY/883
5962-9954801HZA 5962-9954801HZC	50821 50821	MOR2805SZ/883 MOR2805SZ/883

1/ The lead finish shown for each PIN, representing a hermetic package, is the most readily available from the manufacturer listed for that part. If the desired lead finish is not listed contact the Vendor to determine availability.

2/ Caution. Do not use this number for item acquisition. Items acquired to this number may not satisfy the performance requirements of this drawing.

Vendor CAGE number	Vendor name and address
50821	Interpoint Corporation 10301 Willows Road Redmond, WA 98073-9705

The information contained herein is disseminated for convenience only and the Government assumes no liability whatsoever for any inaccuracies in this information bulletin.

Powered by ICminer.com Electronic-Library Service CopyRight 2003