SMD Phone Jack

161-3335-E

KOBICONN

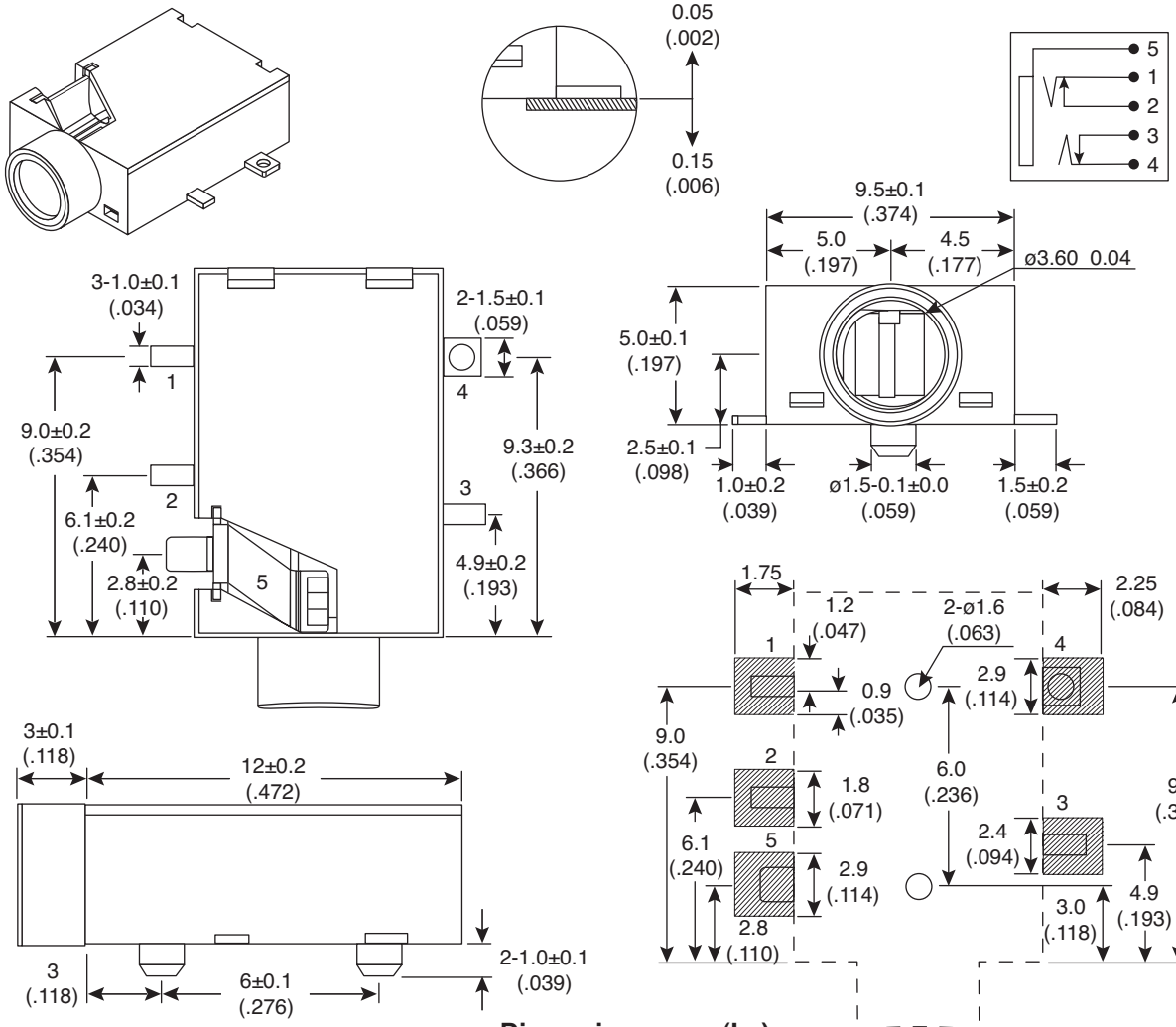

Dimensions: mm (In.)

SPECIFICATIONS	
Insertion and extraction force:	0.3 Kgs. to 3.0 Kgs.
Withstand voltage test:	500 VAC 50 to 60Hz for 1 min.
Insulation resistance:	100 MΩ min 500 VDC
Contact resistance:	50 mΩ Max
Durability test:	5000 mating cycles
Operating temperature:	-25 to 85°C
Rated voltage:	16 volts DC
Rated current:	0.3 ampere
Plastic housing:	LCP, Black
Contacts:	Brass, Gold flash Plated
RoHS Compliant	

Date Last Revised: 6-23-06

Available from Mouser Electronics
1-800-346-6873
www.mouser.com

KC-300986

Specifications are subject to change without notice. No liability or warranty implied by this information. Environmental compliance based on producer documentation.