CONNOR–WINFIELD CORPORATION

AURORA, IL. 60505

PHONE (630) 851–4722

FAX (630) 851–5040

OSCILLATORS

14 PIN DIP
HIGH SPEED SINEWAVE

SPECIFICATIONS	SW73*	
Frequency Range	1MHz to 70MHz	
Frequency Tolerance	±.01%	
Temperature Range	–55°C to +125°C	
Output * – (add suffix to model number)	Sinewave, AC Coupled T.H.D. <5%, 2% Typ	
	5	10dBm ±3dBm into a 50 ohms load
	10	3Vrms ±1Vrms into a 10K ohms load
Supply Voltage	+5Vdc ±10%	
Supply Current	100mA Maximum	
Package	All metal, hermetically sealed, welded package	

EXAMPLE MODEL NUMBER:

S W 7 3 1 0

Sinewave Series — ±.01% –55°C to +125°C — 3Vrms ±1Vrms 10K Ohm Load

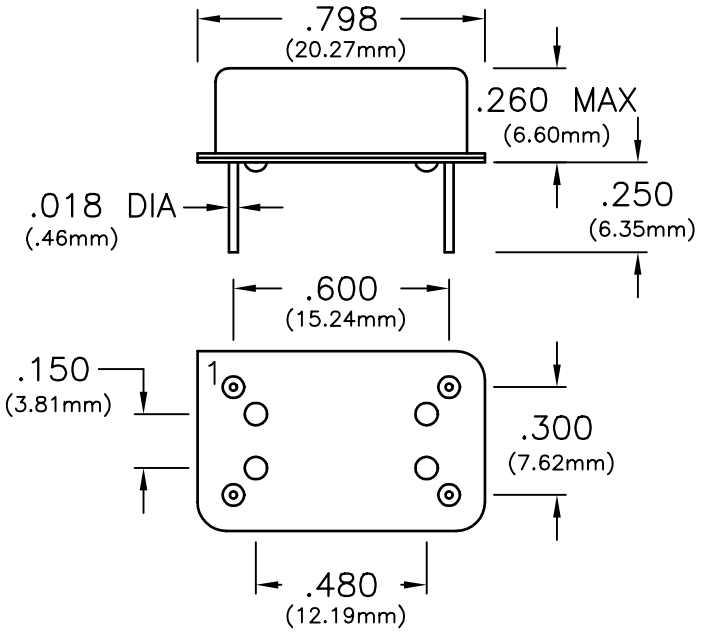

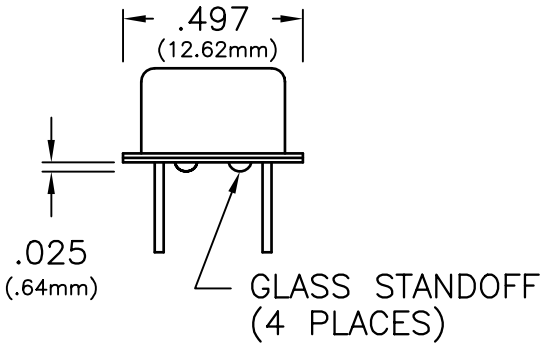

PIN	CONNECTION
1	N/C
7	GROUND (CASE)
8	OUTPUT
14	(+) SUPPLY

Dimensional Tolerance ±.005

Specifications subject to change without notice

BULLETIN #: SW033	REV: 00		
PAGE 1 OF 1	DATE: 11/14/96	ISSUED BY:	