www.DataSheet4U.com

5ϕ Round Infrared LED

SID300/1003 Series

External Dimensions

(Unit: mm)

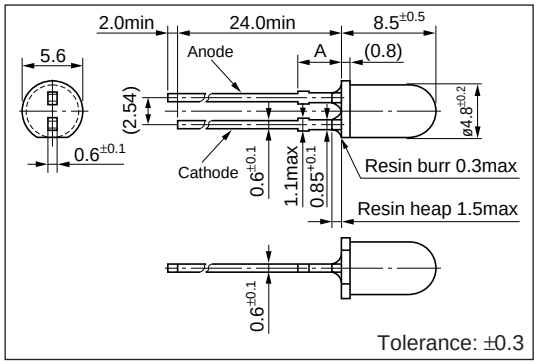

Directivity (Typical)

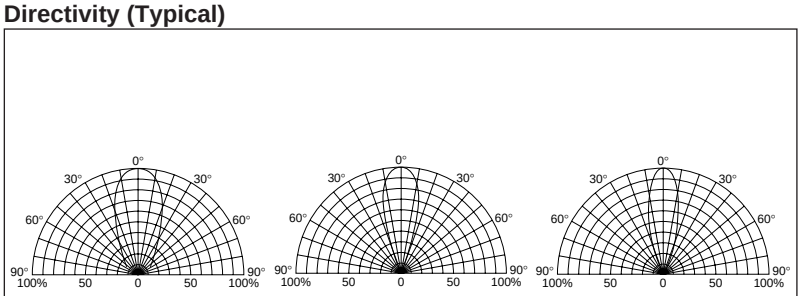

Absolute maximum ratings (Ta=25°C)

Symbol	Unit	Rating	Condition
I_F	mA	150	
ΔI_F	mA/°C	–1.33	Above 25°C
I_{FP}	mA	1000	f=1kHz, tw≤10μs
V_R	V	5	
Top	°C	–30 to +85	
Tstg	°C	–30 to +100	

Electrical Optical characteristics (Ta=25°C)

Part Number	Lens color	Forward voltage V_F (V) typ	Forward voltage V_F (V) max	Condition I_F (mA)	Reverse current I_R (μA) max	Condition V_R (V)	Optical Power I_e (mW/sr) typ	Condition	Peak wavelength λP (nm) typ	Condition I_F (mA)	Spectrum half width Δλ (nm) typ	Condition I_F (mA)	Chip material	Dimension A (mm)
SID303C	Clear	1.3	1.5	50	10	5	80	(Constant	940	50	50	50	GaAs	$3.0^{\pm0.5}$
SID313BP	Transparent light purple	1.3	1.5	50	10	5	130	voltage)	940	50	50	50		$3.6^{\pm0.5}$
SID1003BQ	Transparent light navy blue	1.3	1.5	50	10	5	180	V_{CC}=3V	940	50	50	50		
SID307BR	Transparent dark navy blue	1.3	1.5	50	10	5	200	R=2.2Ω	940	50	50	50		$4.2^{\pm0.5}$
SID1G307C	Clear	1.5	1.8	50	10	5	50	I_F=50mA	850	50	40	50		