DATA SHEET

PT14/8
PT, PTS, PTS/I cores and accessories

Supersedes data of September 2004

2008 Sep 01

FERROXCUBE
A YAGEO COMPANY

CORE SETS

Effective core parameters

SYMBOL	PARAMETER	VALUE	UNIT
$\Sigma(l/A)$	core factor (C1)	0.910	mm^{-1}
V_e	effective volume	492	mm^3
l_e	effective length	21.1	mm
A_e	effective area	23.3	mm^2
A_{min}	minimum area	19.9	mm^2
m	mass of set	≈ 2.8	g

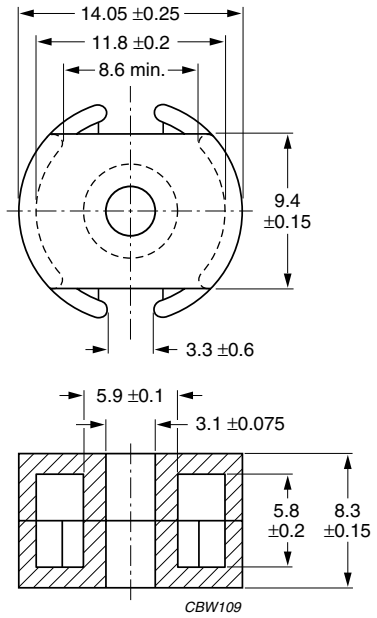

Dimensions in mm.

Fig.1 PT14/8 core set.

Core sets for general purpose transformers and power applications

Clamping force for A_L measurements, 15 ±15 N.

GRADE	A_L (nH)	μ_e	AIR GAP (μm)	TYPE NUMBER
3C81 sup	63 ±3%	≈ 45	≈ 630	PT14/8-3C81-A63
	100 ±3%	≈ 72	≈ 360	PT14/8-3C81-A100
	160 ±3%	≈ 115	≈ 210	PT14/8-3C81-A160
	250 ±3%	≈ 180	≈ 120	PT14/8-3C81-A250
	315 ±5%	≈ 227	≈ 90	PT14/8-3C81-A315
	2400 ±25%	≈ 1730	≈ 0	PT14/8-3C81
3C91 sup	2400 ±25%	≈ 1730	≈ 0	PT14/8-3C91
3F3 sup	63 ±3%	≈ 45	≈ 630	PT14/8-3F3-A63
	100 ±3%	≈ 72	≈ 360	PT14/8-3F3-A100
	160 ±3%	≈ 115	≈ 210	PT14/8-3F3-A160
	250 ±3%	≈ 180	≈ 120	PT14/8-3F3-A250
	315 ±5%	≈ 227	≈ 90	PT14/8-3F3-A315
	1650 ±25%	≈1190	≈ 0	PT14/8-3F3

Core sets of high permeability grades

Clamping force for A_L measurements, 15 ±5 N.

GRADE	A_L (nH)	μ_e	AIR GAP (μm)	TYPE NUMBER
3E27 sup	4500 ±25%	≈ 3240	≈ 0	PT14/8-3E27

Properties of core sets under power conditions

GRADE	B (mT) at	CORE LOSS (W) at			
	H = 250 A/m; f = 25 kHz; T = 100 °C	f = 25 kHz; $\hat{B}$ = 200 mT; T = 100 °C	f = 100 kHz; $\hat{B}$ = 100 mT; T = 100 °C	f = 100 kHz; $\hat{B}$ = 200 mT; T = 100 °C	f = 400 kHz; $\hat{B}$ = 50 mT; T = 100 °C
3C81	≥320	≤ 0.11	–	–	–
3C91	≥320	–	≤ 0.03(1)	≤ 0.22(1)	–
3F3	≥315	–	≤ 0.06	–	≤ 0.1

Note

1. Measured at 60 °C.

COIL FORMERS

General data 6-pins PT14/8 coil former

PARAMETER	SPECIFICATION
Coil former material	polyamide (PA), glass-reinforced, flame retardant in accordance with *"UL 94V-0"*; UL file number E41938(M)
Pin material	copper-tin alloy (CuSn), tin (Sn) plated
Maximum operating temperature	130 °C, *"IEC 60085"* class B
Resistance to soldering heat	*"IEC 60068-2-20"*, Part 2, Test Tb, method 1B, 350 °C, 3.5 s
Solderability	*"IEC 60068-2-20"*, Part 2, Test Ta, method 1

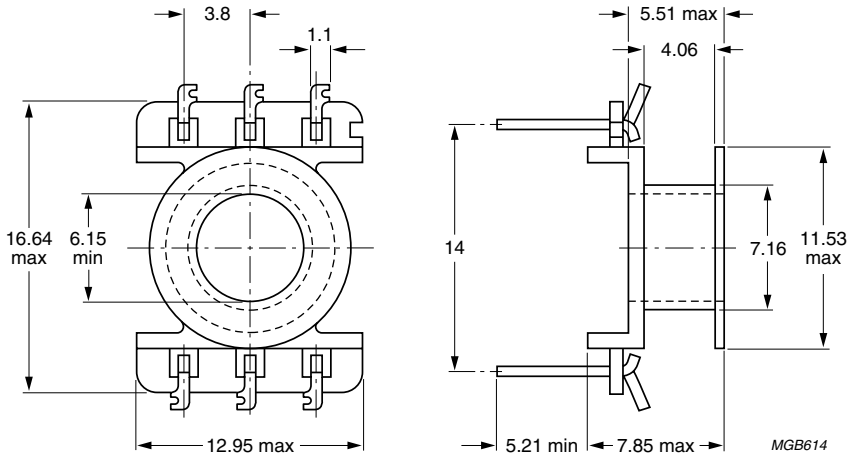

Dimensions in mm.

Fig.2 PT14/8 coil former; 6-pins.

Winding data and area product for 6-pins PT14/8 coil former

NUMBER OF SECTIONS	MINIMUM WINDING AREA (mm^2)	NOMINAL WINDING WIDTH (mm)	AVERAGE LENGTH OF TURN (mm)	AREA PRODUCT Ae x Aw (mm^4)	TYPE NUMBER
1	7.9	4.1	29.2	184	CPV-PT14/8-1S-6P

Additional coil formers and mounting parts are those of *"P14/8"*, but *"area product"* is different.

Winding data and area product (for PT14/8) for CP-P14/8 coil former

NUMBER OF SECTIONS	WINDING AREA (mm^2)	MINIMUM WINDING WIDTH (mm)	AVERAGE LENGTH OF TURN (mm)	AREA PRODUCT Ae x Aw (mm^4)	TYPE NUMBER
1	8.8	4.1	28.9	205	CP-P14/8-1S
2	2×4.0	2×1.85	28.9	2 x 93.2	CP-P14/8-2S

Winding data and area product (for PT14/8) for CP-P14/8-A coil former

NUMBER OF SECTIONS	MINIMUM WINDING AREA (mm^2)	NOMINAL WINDING WIDTH (mm)	AVERAGE LENGTH OF TURN (mm)	AREA PRODUCT Ae x Aw (mm^4)	TYPE NUMBER
1	9.4	4.5	29.0	219	CP-P14/8-1S-A
2	2 x 4.32	2 x 2.0	29.0	2 x 101	CP-P14/8-2S-A
3	3×2.19	3×1.2	29.0	3 x 51.0	CP-P14/8-3S-A

Winding data and area product (for PT14/8) for 4-pins P14/8 coil former for PCB mounting

NUMBER OF SECTIONS	MINIMUM WINDING AREA (mm^2)	NOMINAL WINDING WIDTH (mm)	AVERAGE LENGTH OF TURN (mm)	LENGTH OF PINS (mm)	AREA PRODUCT Ae x Aw (mm^4)	TYPE NUMBER
1	8.65	4.4	29.0	4.4	202	CPV-P14/8-1S-4SPD
1	8.65	4.4	29.0	6.8	202	CPV-P14/8-1S-4SPDL
2	2×3.87	2×2.0	29.0	4.4	2 x 90.2	CPV-P14/8-2S-4SPD
2	2×3.87	2×2.0	29.0	6.8	2 x 90.2	CPV-P14/8-2S-4SPDL

Winding data and area product (for PT14/8) for 6-pins P14/8 coil former for PCB mounting

NUMBER OF SECTIONS	MINIMUM WINDING AREA (mm^2)	NOMINAL WINDING WIDTH (mm)	AVERAGE LENGTH OF TURN (mm)	LENGTH OF PINS (mm)	AREA PRODUCT Ae x Aw (mm^4)	TYPE NUMBER
1	8.65	4.4	29.0	4.4	202	CPV-P14/8-1S-6PD
1	8.65	4.4	29.0	6.8	202	CPV-P14/8-1S-6PDL
2	2×3.87	2×2.0	29.0	4.4	2 x 90.2	CPV-P14/8-2S-6PD
2	2×3.87	2×2.0	29.0	6.8	2 x 90.2	CPV-P14/8-2S-6PDL

DATA SHEET STATUS DEFINITIONS

DATA SHEET STATUS	PRODUCT STATUS	DEFINITIONS
Preliminary specification	Development	This data sheet contains preliminary data. Ferroxcube reserves the right to make changes at any time without notice in order to improve design and supply the best possible product.
Product specification	Production	This data sheet contains final specifications. Ferroxcube reserves the right to make changes at any time without notice in order to improve design and supply the best possible product.

DISCLAIMER

Life support applications — These products are not designed for use in life support appliances, devices, or systems where malfunction of these products can reasonably be expected to result in personal injury. Ferroxcube customers using or selling these products for use in such applications do so at their own risk and agree to fully indemnify Ferroxcube for any damages resulting from such application.

PRODUCT STATUS DEFINITIONS

STATUS	INDICATION	DEFINITION
Prototype	prot	These are products that have been made as development samples for the purposes of technical evaluation only. The data for these types is provisional and is subject to change.
Design-in	des	These products are recommended for new designs.
Preferred		These products are recommended for use in current designs and are available via our sales channels.
Support	sup	These products are **not** recommended for new designs and may not be available through all of our sales channels. Customers are advised to check for availability.