molex
one company › a world of innovation

This document was generated on 05/31/2010

PLEASE CHECK WWW.MOLEX.COM FOR LATEST PART INFORMATION

Part Number: 0719733424

Status: Active

Overview: cgrid__sl_products

Description: 2.54mm (.100") Pitch C-Grid® PCB Connector, Dual Row, Right Angle, Early Entry Receptacle, without Flange, 48 Circuits, Lead free

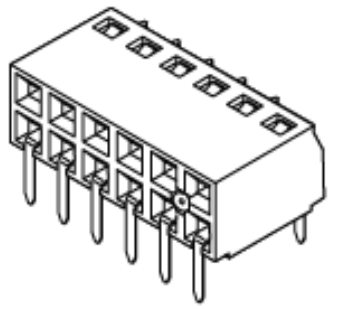

Series

image - Reference only

Documents:

3D Model
Drawing (PDF)
Product Specification PS-71973-9999 (PDF)
RoHS Certificate of Compliance (PDF)

Agency Certification

CSA	LR19980
UL	E29179

General

Product Family	PCB Receptacles
Series	71973
Application	Board-to-Board
Overview	cgrid__sl_products
Product Name	C-Grid®

Physical

Circuits (Loaded)	48
Color - Resin	Black
Durability (mating cycles max)	50
Flammability	94V-0
Glow-Wire Compliant	No
Material - Metal	Phosphor Bronze
Material - Plating Mating	Gold
Material - Plating Termination	Tin
Material - Resin	High Temperature Thermoplastic
Number of Rows	2
Orientation	Right Angle
PC Tail Length (in)	0.120 In
PC Tail Length (mm)	3.05 mm
PCB Locator	No
PCB Retention	None
PCB Thickness Recommended (in)	0.062 In
PCB Thickness Recommended (mm)	1.60 mm
Packaging Type	Tube
Pitch - Mating Interface (in)	0.100 In
Pitch - Mating Interface (mm)	2.54 mm
Plating min: Mating (µin)	15
Plating min: Mating (µm)	0.38
Plating min: Termination (µin)	75
Plating min: Termination (µm)	1.90
Polarized to PCB	No
Temperature Range - Operating	-40°C to +105°C
Termination Interface: Style	Through Hole

Electrical

Current - Maximum per Contact	2A
Voltage - Maximum	250V

Material Info

Reference - Drawing Numbers

EU RoHS
ELV and RoHS Compliant

China RoHS

REACH SVHC
Contains SVHC: No

Halogen-Free Status
Not Reviewed

Need more information on product environmental compliance?

Email productcompliance@molex.com
For a multiple part number RoHS Certificate of Compliance, click here

Please visit the Contact Us section for any non-product compliance questions.

Search Parts in this Series
71973Series

This document was generated on 05/31/2010

PLEASE CHECK WWW.MOLEX.COM FOR LATEST PART INFORMATION

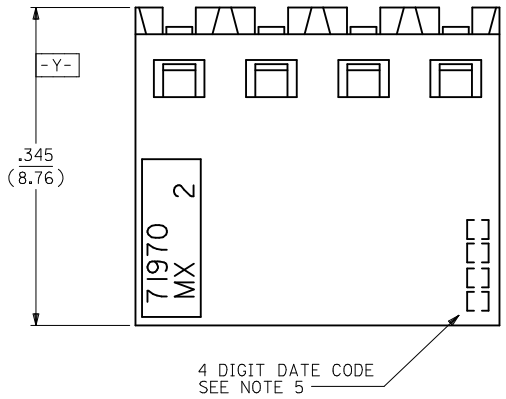

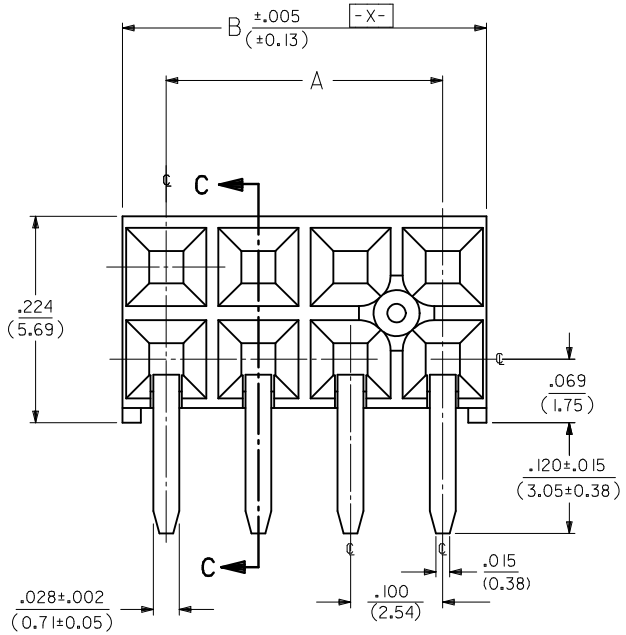

⊕	Ø.015Ⓢ			TAIL TO TAIL
⊕	Ø.020Ⓢ	XⓈ	YⓈ	TAIL TO INSULATOR

OPTION "A" ASSEMBLY

STANDARD HOUSING

NOTE FOR LEAD FREE CONVERSION:

THE PRIMARY SHIPPING CARTON WILL BE LABELED "COMPLIANT TO RoHS DIRECTIVE 2002/95/EC AND ELV ANNEX II OF DIRECTIVE 2000/53/EC". CARTONS WITHOUT THIS LABEL MAY CONTAIN PRODUCT WITH LEAD.

NOTES:

1.) MATERIAL-
INSULATOR - LCP, UL 94V-0, COLOR BLACK
CONTACTS - PHOSPHOR BRONZE

2.) SEE SHT. 5 & 6 FOR CHART DIMENSIONS AND EDP NO.'S

3.) RECOMMENDED MATING PIN LENGTH:
LOWER ROW - .200" MIN., .285" MAX.
UPPER ROW - .200" MIN.

4.) REFER TO PRODUCT SPECIFICATION PS-71973-9999 FOR PERFORMANCE DATA

5.) MANUFACTURED DATE CODE - YEAR, WEEK.

6.) PACKAGING: FOR THIS PRODUCT IN TUBES SEE SHT. 6 & 7
FOR THIS PRODUCT IN TRAYS SEE SHT. 8 & 9

FINISHES

15 GOLD .000015 MINIMUM GOLD PLATE IN SELECT AREA OVER
.000050 MINIMUM NICKEL UNDERPLATE OVER-ALL WITH
.000075 MINIMUM TIN PLATE IN SELECT AREA.

30 GOLD .000030 MINIMUM GOLD PLATE IN SELECT AREA OVER
.000050 MINIMUM NICKEL UNDERPLATE OVER-ALL WITH
.000075 MINIMUM TIN PLATE IN SELECT AREA.

50 GOLD .000050 MINIMUM GOLD PLATE IN SELECT AREA OVER
.000050 MINIMUM NICKEL UNDERPLATE OVER-ALL WITH
.000100 MINIMUM TIN PLATE IN SELECT AREA.

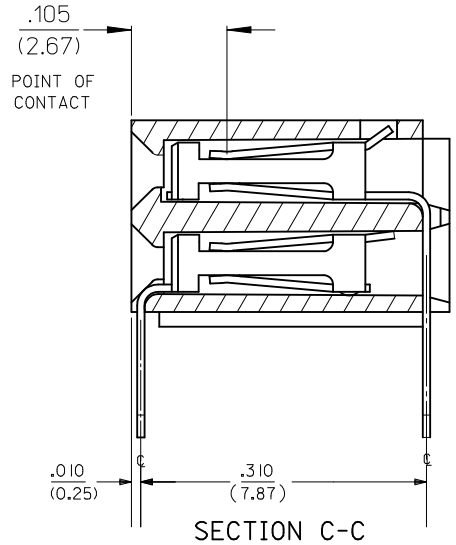

SECTION C-C

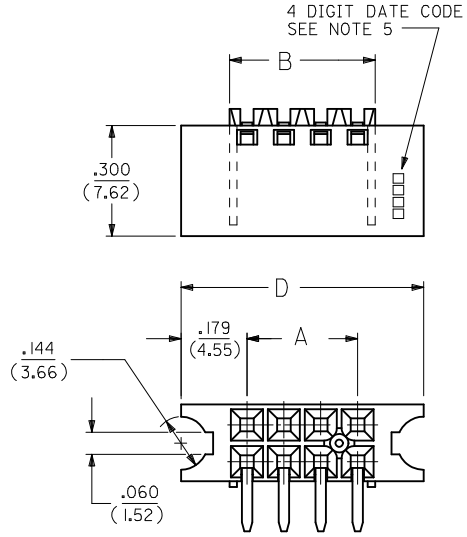

OPTION "B" ASSEMBLY

STD. HOUSING W/MOUNTING EARS
SCALE 4:1
REFER TO OPT. A FOR ALL OTHER INFORMATION

OPTION "J" ASSEMBLY

OPTION "J" IS THE SAME AS OPTION "B" EXCEPT DATE CODE IS NOT STAMPED ON HOUSING.

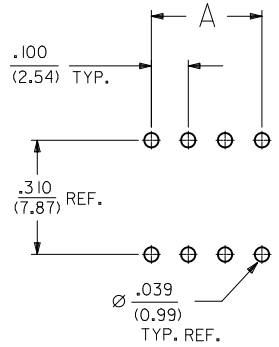

RECOMMENDED P.C.B. LAYOUT

ADD OPTION K & L	2009/12/30	DESCRIPTION	
EC NO: S2010-0534	2010/01/08		
DRWN:SKANG	2010/01/14		
CH'KD:ATSEE			
APPR:MLONG			
K		REV	

QUALITY SYMBOLS
F_A=0
F_C=0
F_P=0

GENERAL TOLERANCES (UNLESS SPECIFIED)

	mm	INCH
4 PLACES	± ---	± ---
3 PLACES	± ---	± .010
2 PLACES	± 0.25	± ---
1 PLACE	± ---	± ---
ANGULAR ±1/2°		

DRAFT WHERE APPLICABLE MUST REMAIN WITHIN DIMENSIONS

DIMENSION STYLE: IN/MM	SCALE: NTS	DESIGN UNITS: INCH	THIRD ANGLE PROJECTION
DRAWN BY: DJB	DATE: 1991/10/21	TITLE: EARLY ENTRY R/A RECPT .120"PC TAIL W/O LOWER ROW PINSTOP-.100" GRID	
CHECKED BY: DJB	DATE: 1991/10/21		
APPROVED BY: MLONG	DATE: 2010/01/14	MOLEX INCORPORATED	
MATERIAL NO.: SEE TABLE		DOCUMENT NO.: SDA-71973-****	SHEET NO.: 1 OF 26
SIZE: A3	THIS DRAWING CONTAINS INFORMATION THAT IS PROPRIETARY TO MOLEX INCORPORATED AND SHOULD NOT BE USED WITHOUT WRITTEN PERMISSION		

tb_frame_A3_P_AM_T
Rev. F 2009/06/18

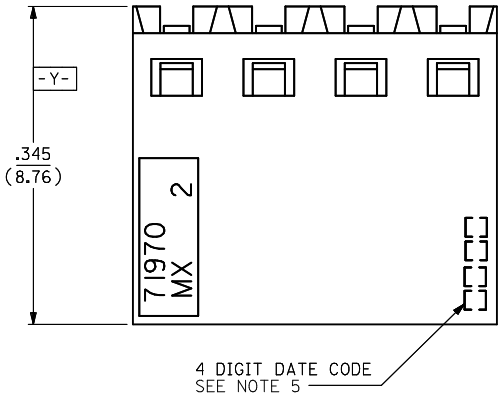

NOTES:

1.) MATERIAL-
INSULATOR - LCP, UL 94V-0, COLOR BLACK
CONTACTS - PHOSPHOR BRONZE

2.) SEE SHT. 9 & 10 FOR CHART DIMENSIONS AND EDP NO.'S

3.) RECOMMENDED MATING PIN LENGTH:
LOWER ROW - .200" MIN., .285" MAX.
UPPER ROW - .200" MIN.

4.) REFER TO PRODUCT SPECIFICATION PS-71973-9999 FOR PERFORMANCE DATA

5.) MANUFACTURED DATE CODE - YEAR,WEEK.

6.) PACKAGING: FOR THIS PRODUCT IN TUBES SEE SHT. 10 & 11
FOR THIS PRODUCT IN TRAYS SEE SHT. 12 & 13

FINISHES

15 GOLD .000015 MINIMUM GOLD PLATE IN SELECT AREA OVER
.000050 MINIMUM NICKEL UNDERPLATE OVER-ALL WITH
.000075 MINIMUM TIN PLATE IN SELECT AREA.

30 GOLD .000030 MINIMUM GOLD PLATE IN SELECT AREA OVER
.000050 MINIMUM NICKEL UNDERPLATE OVER-ALL WITH
.000075 MINIMUM TIN PLATE IN SELECT AREA.

50 GOLD .000050 MINIMUM GOLD PLATE IN SELECT AREA OVER
.000050 MINIMUM NICKEL UNDERPLATE OVER-ALL WITH
.000100 MINIMUM TIN PLATE IN SELECT AREA.

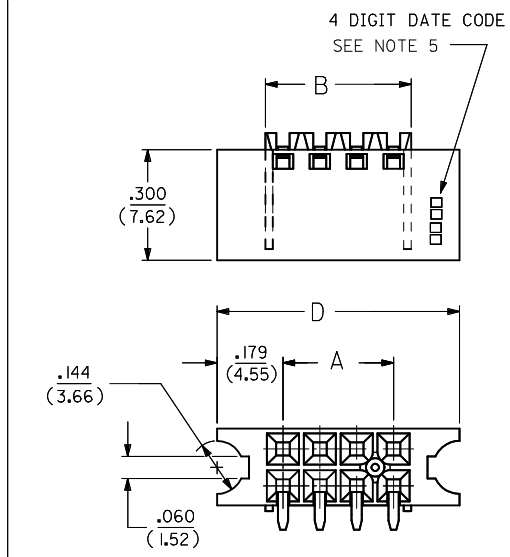

OPTION "D" ASSEMBLY

STD. HOUSING W/MOUNTING EARS
SCALE 4:1

REFER TO OPT. C FOR ALL OTHER INFORMATION

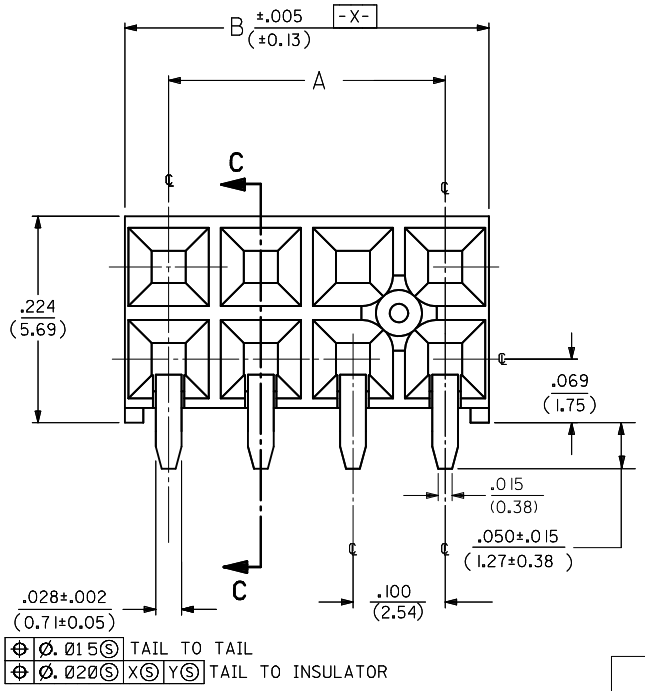

OPTION "C" ASSEMBLY

STANDARD HOUSING

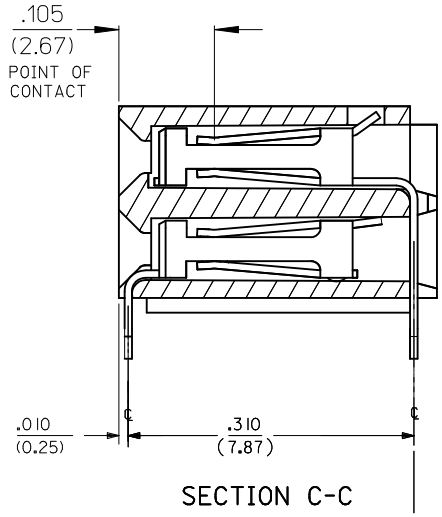

SECTION C-C

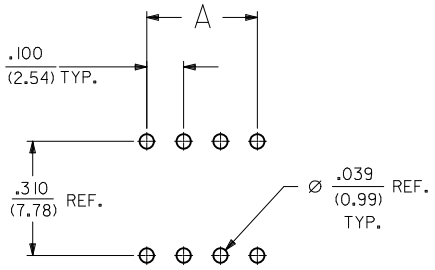

RECOMMENDED P.C.B. LAYOUT

NOTE FOR LEAD FREE CONVERSION:
THE PRIMARY SHIPPING CARTON WILL BE LABELED "COMPLIANT TO RoHS DIRECTIVE 2002/95/EC AND ELV ANNEX II OF DIRECTIVE 2000/53/EC". CARTONS WITHOUT THIS LABEL MAY CONTAIN PRODUCT WITH LEAD.

ADD OPTION K & L	2009/12/30		
EC NO: S2010-0534	2010/01/08		
DRWN:SKANG	2010/01/14		
CH'KD:ATSEE			
APPR:MLONG			
K		DESCRIPTION	REV

QUALITY SYMBOLS: FA=0, FC=0, FB=0

GENERAL TOLERANCES (UNLESS SPECIFIED)

	mm	INCH
4 PLACES	± ---	± ---
3 PLACES	± ---	± .010
2 PLACES	± 0.25	± ---
1 PLACE	± ---	± ---
ANGULAR ±1/2°		

DRAFT WHERE APPLICABLE MUST REMAIN WITHIN DIMENSIONS

DIMENSION STYLE: IN/MM	SCALE: NTS	DESIGN UNITS: INCH	THIRD ANGLE PROJECTION
DRAWN BY: DJB	DATE: 1991/10/21	TITLE: EARLY ENTRY R/A RECPT .120"PC TAIL W/O LOWER ROW PINSTOP-.100" GRID	
CHECKED BY: DJB	DATE: 1991/10/21		
APPROVED BY: MLONG	DATE: 2010/01/14	MOLEX INCORPORATED	
MATERIAL NO.: SEE TABLE		DOCUMENT NO.: SDA-71973-****	SHEET NO.: 2 OF 26
SIZE: A3	THIS DRAWING CONTAINS INFORMATION THAT IS PROPRIETARY TO MOLEX INCORPORATED AND SHOULD NOT BE USED WITHOUT WRITTEN PERMISSION		

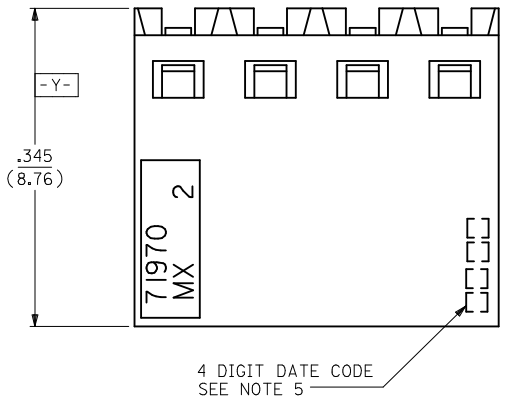

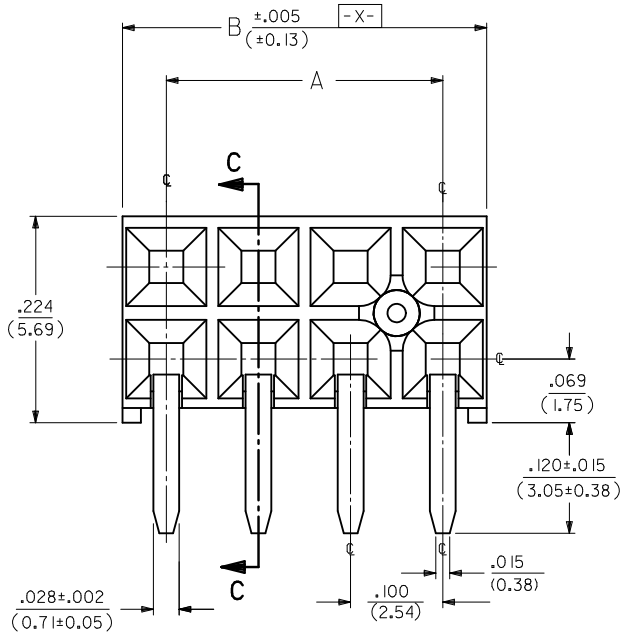

OPTION "E" ASSEMBLY

STANDARD HOUSING

NOTE FOR LEAD FREE CONVERSION:

THE PRIMARY SHIPPING CARTON WILL BE LABELED "COMPLIANT TO RoHS DIRECTIVE 2002/95/EC AND ELV ANNEX II OF DIRECTIVE 2000/53/EC". CARTONS WITHOUT THIS LABEL MAY CONTAIN PRODUCT WITH LEAD.

NOTES:

1.) MATERIAL-
INSULATOR - LCP, UL 94V-0, COLOR BLACK
CONTACTS - PHOSPHOR BRONZE

2.) SEE SHT. 13 & 14 FOR CHART DIMENSIONS AND EDP NO.'S

3.) RECOMMENDED MATING PIN LENGTH:
LOWER ROW - .200" MIN., .250" MAX.
UPPER ROW - .200" MIN.

4.) REFER TO PRODUCT SPECIFICATION PS-71973-9999 FOR PERFORMANCE DATA

5.) MANUFACTURED DATE CODE - YEAR,WEEK.

6.) PACKAGING: FOR THIS PRODUCT IN TUBES SEE SHT. 14 & 15
FOR THIS PRODUCT IN TRAYS SEE SHT. 16 & 17

FINISHES

15 GOLD .000015 MINIMUM GOLD PLATE IN SELECT AREA OVER
.000050 MINIMUM NICKEL UNDERPLATE OVER-ALL WITH
.000075 MINIMUM TIN PLATE IN SELECT AREA.

30 GOLD .000030 MINIMUM GOLD PLATE IN SELECT AREA OVER
.000050 MINIMUM NICKEL UNDERPLATE OVER-ALL WITH
.000075 MINIMUM TIN PLATE IN SELECT AREA.

50 GOLD .000050 MINIMUM GOLD PLATE IN SELECT AREA OVER
.000050 MINIMUM NICKEL UNDERPLATE OVER-ALL WITH
.000100 MINIMUM TIN PLATE IN SELECT AREA.

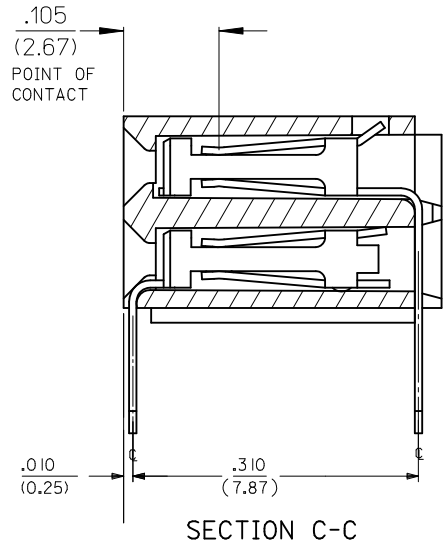

SECTION C-C

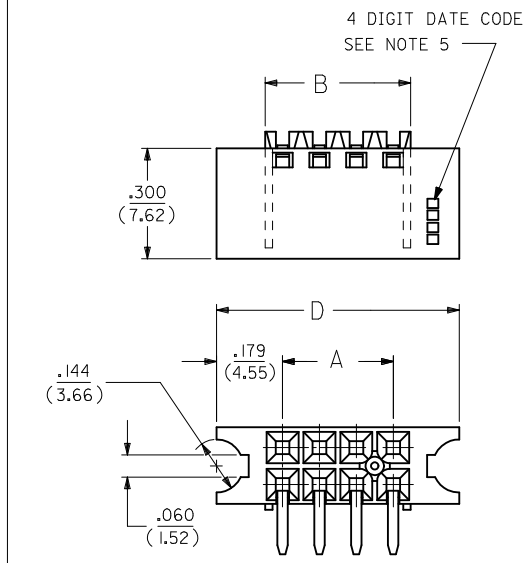

OPTION "F" ASSEMBLY

STD. HOUSING W/MOUNTING EARS AND LOWER ROW PINSTOP
SCALE 4:1

REFER TO OPT. E FOR ALL OTHER INFORMATION

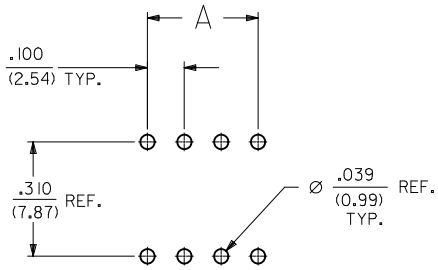

RECOMMENDED P.C.B. LAYOUT

ADD OPTION K & L	2009/12/30		
EC NO: S2010-0534	2010/01/08		
DRWN:SKANG	2010/01/14		
CH'KD:ATSEE			
APPR:MLONG			
K		DESCRIPTION	REV

QUALITY SYMBOLS: FA=0, FC=0, FP=0

GENERAL TOLERANCES (UNLESS SPECIFIED)

	mm	INCH
4 PLACES	± ---	± ---
3 PLACES	± ---	± .010
2 PLACES	± 0.25	± ---
1 PLACE	± ---	± ---
ANGULAR ±1/2°		

DRAFT WHERE APPLICABLE MUST REMAIN WITHIN DIMENSIONS

DIMENSION STYLE: IN/MM	SCALE: NTS	DESIGN UNITS: INCH	THIRD ANGLE PROJECTION
DRAWN BY: DJB	DATE: 1991/10/21	TITLE: EARLY ENTRY R/A RECPT .120"PC TAIL W/O LOWER ROW PINSTOP-.100" GRID	
CHECKED BY: DJB	DATE: 1991/10/21		
APPROVED BY: MLONG	DATE: 2010/01/14	molex MOLEX INCORPORATED	
MATERIAL NO.: SEE TABLE		DOCUMENT NO.: SDA-71973-****	SHEET NO.: 3 OF 26
SIZE: A3	THIS DRAWING CONTAINS INFORMATION THAT IS PROPRIETARY TO MOLEX INCORPORATED AND SHOULD NOT BE USED WITHOUT WRITTEN PERMISSION		

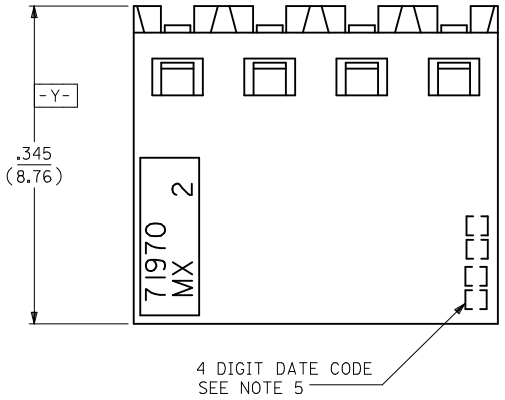

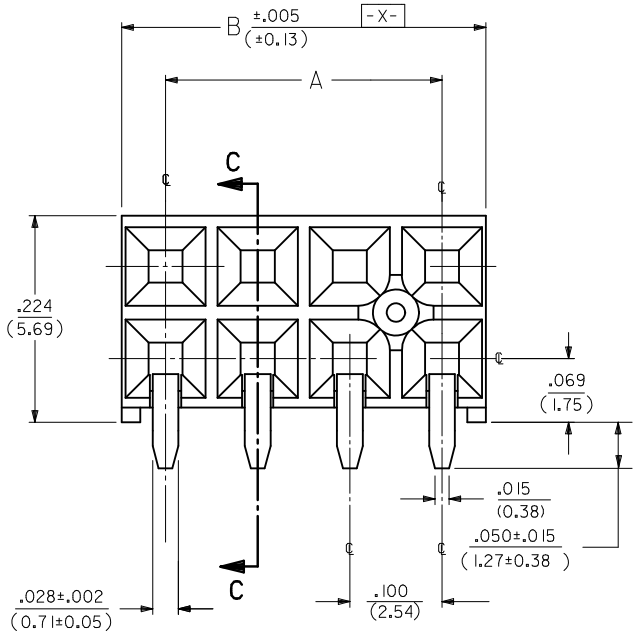

OPTION "G" ASSEMBLY

STANDARD HOUSING

NOTES:

1.) MATERIAL-
INSULATOR - LCP, UL 94V-0, COLOR BLACK
CONTACTS - PHOSPHOR BRONZE

2.) SEE SHT. 17 & 18 FOR CHART DIMENSIONS AND EDP NO.'S

3.) RECOMMENDED MATING PIN LENGTH:
LOWER ROW - .200" MIN., .250" MAX.
UPPER ROW - .200" MIN.

4.) REFER TO PRODUCT SPECIFICATION PS-71973-9999 FOR PERFORMANCE DATA

5.) MANUFACTURED DATE CODE - YEAR,WEEK.

6.) PACKAGING: FOR THIS PRODUCT IN TUBES SEE SHT. 18 & 19
FOR THIS PRODUCT IN TRAYS SEE SHT. 20 & 21

FINISHES

15 GOLD .000015 MINIMUM GOLD PLATE IN SELECT AREA OVER
.000050 MINIMUM NICKEL UNDERPLATE OVER-ALL WITH
.000075 MINIMUM TIN PLATE IN SELECT AREA.

30 GOLD .000030 MINIMUM GOLD PLATE IN SELECT AREA OVER
.000050 MINIMUM NICKEL UNDERPLATE OVER-ALL WITH
.000075 MINIMUM TIN PLATE IN SELECT AREA.

50 GOLD .000050 MINIMUM GOLD PLATE IN SELECT AREA OVER
.000050 MINIMUM NICKEL UNDERPLATE OVER-ALL WITH
.000100 MINIMUM TIN PLATE IN SELECT AREA.

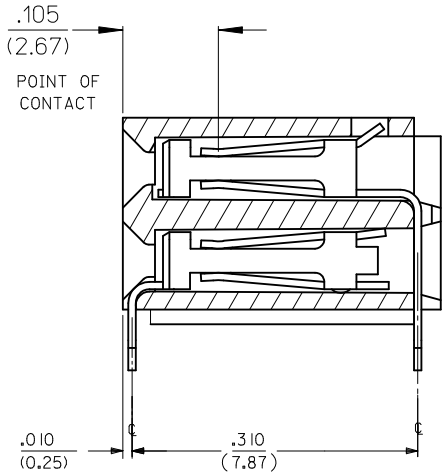

SECTION C-C

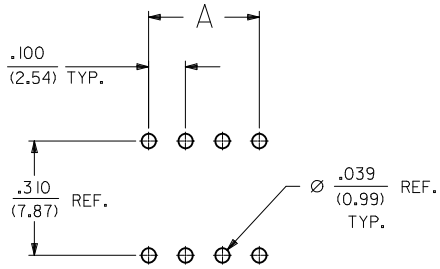

RECOMMENDED P.C.B. LAYOUT

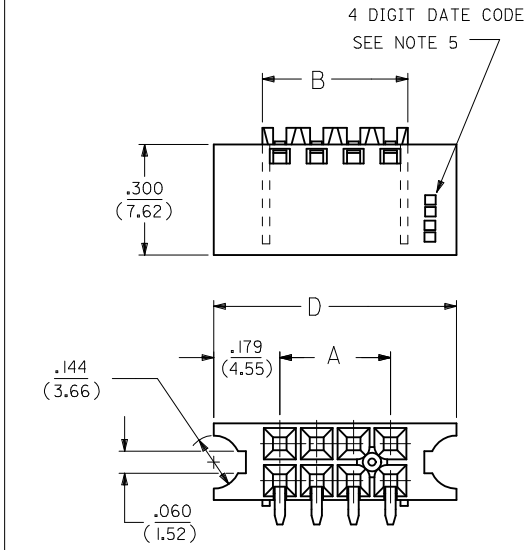

OPTION "H" ASSEMBLY

STD. HOUSING W/MOUNTING EARS
AND LOWER PINSTOP
SCALE 4:1

REFER TO OPT. G FOR ALL OTHER INFORMATION

NOTE FOR LEAD FREE CONVERSION:

THE PRIMARY SHIPPING CARTON WILL BE LABELED "COMPLIANT TO RoHS DIRECTIVE 2002/95/EC AND ELV ANNEX II OF DIRECTIVE 2000/53/EC". CARTONS WITHOUT THIS LABEL MAY CONTAIN PRODUCT WITH LEAD.

REV	DESCRIPTION	DRWN	CH'KD	APPR	DATE
K	ADD OPTION K & L EC NO: S2010-0534	SKANG	ATSEE	MLONG	2009/12/30 2010/01/08 2010/01/14

QUALITY SYMBOLS: F_A=0, F_C=0, F_P=0

GENERAL TOLERANCES (UNLESS SPECIFIED)

	mm	INCH
4 PLACES	± ---	± ---
3 PLACES	± ---	± .010
2 PLACES	± 0.25	± ---
1 PLACE	± ---	± ---
ANGULAR ±1/2°		

DRAFT WHERE APPLICABLE MUST REMAIN WITHIN DIMENSIONS

DIMENSION STYLE: IN/MM

SCALE: NTS

DESIGN UNITS: INCH

THIRD ANGLE PROJECTION

DRAWN BY	DJB	DATE 1991/10/21
CHECKED BY	DJB	DATE 1991/10/21
APPROVED BY	MLONG	DATE 2010/01/14

TITLE: EARLY ENTRY R/A RECPT .120"PC TAIL W/O LOWER ROW PINSTOP-.100" GRID

MOLEX INCORPORATED

MATERIAL NO.: SEE TABLE

DOCUMENT NO.: SDA-71973-****

SHEET NO.: 4 OF 26

SIZE: A3

THIS DRAWING CONTAINS INFORMATION THAT IS PROPRIETARY TO MOLEX INCORPORATED AND SHOULD NOT BE USED WITHOUT WRITTEN PERMISSION

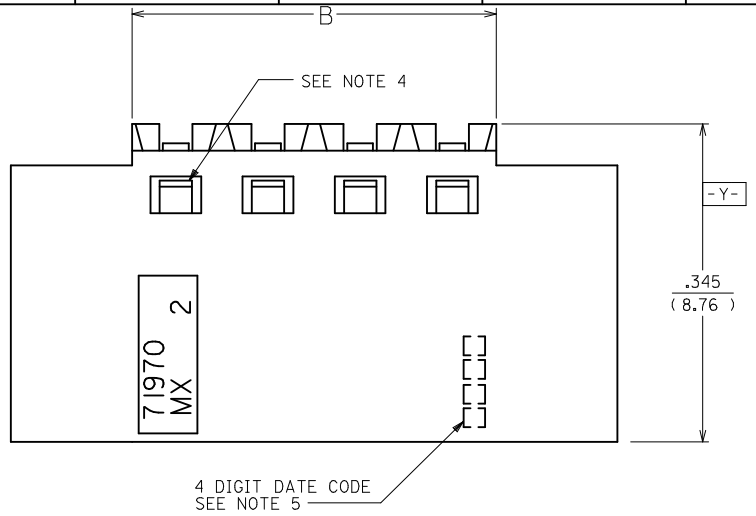

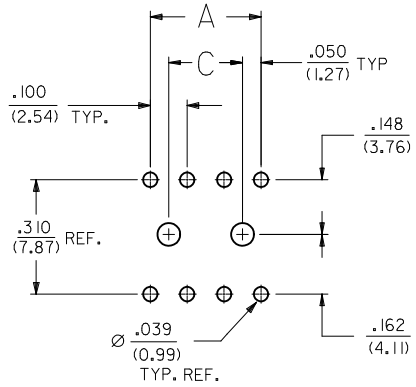

RECOMMENDED P.C.B. LAYOUT

SCALE 4:1

NOTES:

1.) MATERIAL-
INSULATOR - LCP, UL 94V-0, COLOR BLACK
CONTACTS - PHOSPHOR BRONZE
2.) SEE SHT. 22 FOR CHART DIMENSIONS AND ITEM NO.'S
3.) RECOMMENDED MATING PIN LENGTH:
LOWER ROW - .200" MINIMUM, .285" MAX.
UPPER ROW - .200" MINIMUM
4.) REFER TO PRODUCT SPECIFICATION PS-71973-9999 FOR PERFORMANCE DATA
5.) MANUFACTURED DATE CODE - YEAR, WEEK.
6.) PACKAGING: FOR THIS PRODUCT IN TUBES SEE SHT. 22

FINISHES PER ES-88-(***)

15 GOLD .000015 MINIMUM GOLD PLATE IN SELECT AREA OVER .000050 MINIMUM NICKEL UNDERPLATE OVER-ALL WITH .000075 MINIMUM TIN PLATE IN SELECT AREA.

30 GOLD .000030 MINIMUM GOLD PLATE IN SELECT AREA OVER .000050 MINIMUM NICKEL UNDERPLATE OVER-ALL WITH .000075 MINIMUM TIN PLATE IN SELECT AREA.

50 GOLD .000050 MINIMUM GOLD PLATE IN SELECT AREA OVER .000050 MINIMUM NICKEL UNDERPLATE OVER-ALL WITH .000100 MINIMUM TIN PLATE IN SELECT AREA.

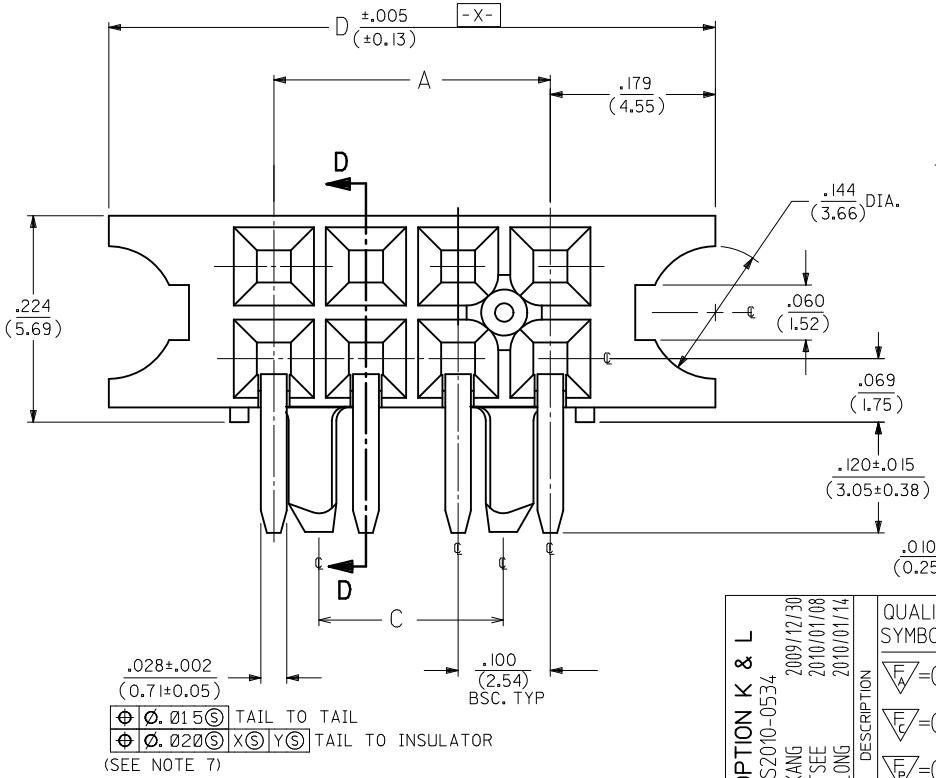

OPTION "I" ASSEMBLY

STANDARD HOUSING W/ PEGS AND MOUNTING EARS

SECTION D-D

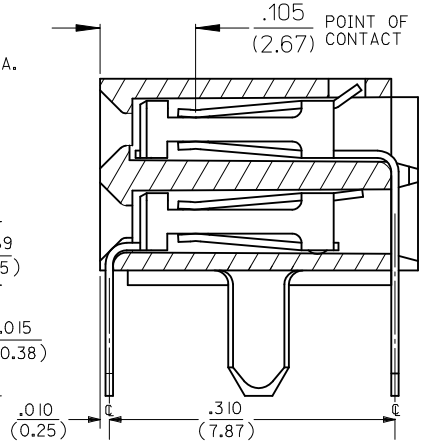

NOTE FOR LEAD FREE CONVERSION:

THE PRIMARY SHIPPING CARTON WILL BE LABELED "COMPLIANT TO RoHS DIRECTIVE 2002/95/EC AND ELV ANNEX II OF DIRECTIVE 2000/53/EC". CARTONS WITHOUT THIS LABEL MAY CONTAIN PRODUCT WITH LEAD.

REV	DESCRIPTION
K	ADD OPTION K & L EC NO: S2010-0534 DRWN:SKANG 2009/12/30 CH'KD:ATSEE 2010/01/08 APPR:MLONG 2010/01/14

QUALITY SYMBOLS: F_A=0, F_C=0, F_P=0

GENERAL TOLERANCES (UNLESS SPECIFIED)

	mm	INCH
4 PLACES	± ---	± ---
3 PLACES	± ---	± .010
2 PLACES	± 0.25	± ---
1 PLACE	± ---	± ---
ANGULAR ±1/2°		

DRAFT WHERE APPLICABLE MUST REMAIN WITHIN DIMENSIONS

DIMENSION STYLE: IN/MM	SCALE: NTS	DESIGN UNITS: INCH	THIRD ANGLE PROJECTION
DRAWN BY: DJB	DATE: 1991/10/21	TITLE: EARLY ENTRY R/A RECPT .120"PC TAIL W/O LOWER ROW PINSTOP-.100" GRID	
CHECKED BY: DJB	DATE: 1991/10/21		
APPROVED BY: MLONG	DATE: 2010/01/14	MOLEX INCORPORATED	
MATERIAL NO.: SEE TABLE		DOCUMENT NO.: SDA-71973-****	SHEET NO.: 5 OF 26
SIZE: A3	THIS DRAWING CONTAINS INFORMATION THAT IS PROPRIETARY TO MOLEX INCORPORATED AND SHOULD NOT BE USED WITHOUT WRITTEN PERMISSION		

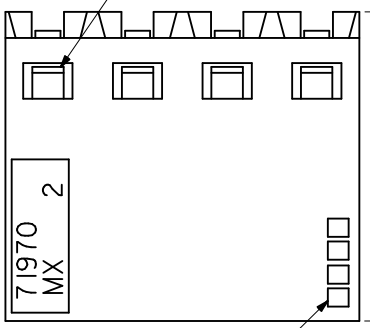

FINISHES

15 GOLD .000015 MINIMUM GOLD PLATE IN SELECT AREA OVER
.000050 MINIMUM NICKEL UNDERPLATE OVER-ALL WITH
.000075 MINIMUM TIN PLATE IN SELECT AREA.

30 GOLD .000030 MINIMUM GOLD PLATE IN SELECT AREA OVER
.000050 MINIMUM NICKEL UNDERPLATE OVER-ALL WITH
.000075 MINIMUM TIN PLATE IN SELECT AREA.

50 GOLD .000050 MINIMUM GOLD PLATE IN SELECT AREA OVER
.000050 MINIMUM NICKEL UNDERPLATE OVER-ALL WITH
.000100 MINIMUM TIN PLATE IN SELECT AREA.

NOTES:

1.) MATERIAL-
INSULATOR - LCP, UL 94V-0, COLOR BLACK
CONTACTS - PHOSPHOR BRONZE
2.) SEE SHT. 25 FOR CHART DIMENSIONS AND ITEM NO.'S
3.) RECOMMENDED MATING PIN LENGTH:
LOWER ROW - .200" MINIMUM, .285" MAX.
UPPER ROW - .200" MINIMUM
4.) REFER TO PRODUCT SPECIFICATION PS-71973-9999 FOR PERFORMANCE DATA
5.) MANUFACTURED DATE CODE - YEAR, WEEK.
6.) PACKAGING: FOR THIS PRODUCT IN TUBES SEE SHT. 25

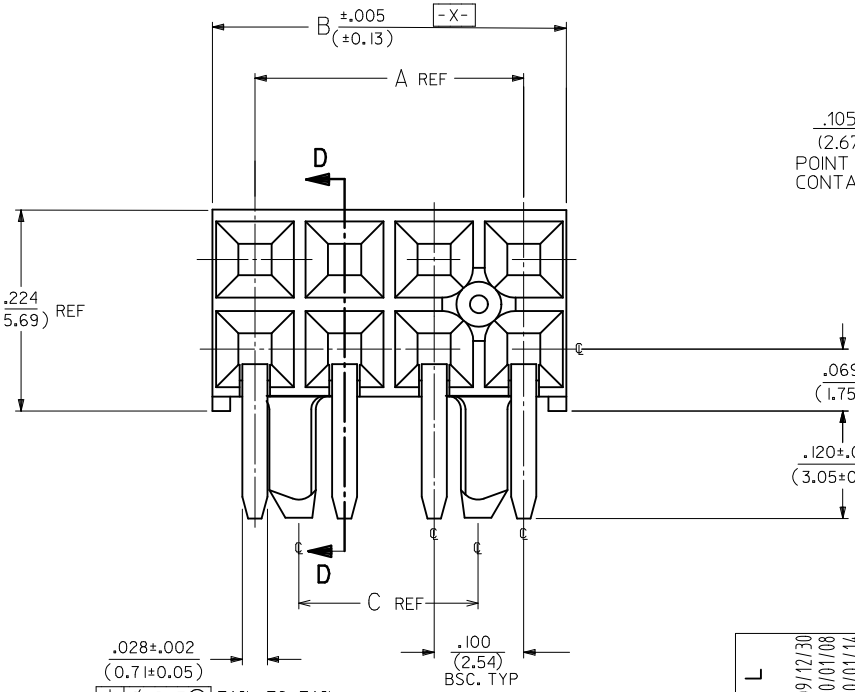

OPTION "K" ASSEMBLY

STANDARD HOUSING W/ PEGS

SECTION D-D

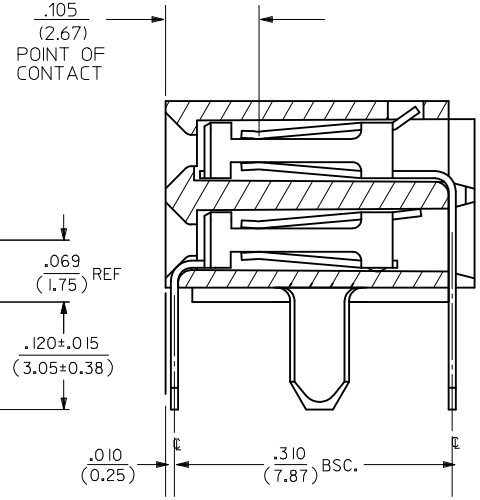

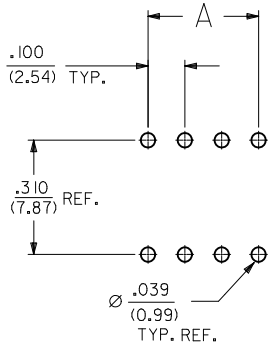

RECOMMENDED P.C.B. LAYOUT

ADD OPTION K & L	2009/12/30		
EC NO: S2010-0534	2010/01/08		
DRWN:SKANG	2010/01/14		
CH'KD:ATSEE			
APPR:MLONG			
K		DESCRIPTION	REV

QUALITY SYMBOLS
FA=0
FC=0
FB=0

GENERAL TOLERANCES (UNLESS SPECIFIED)

	mm	INCH
4 PLACES	± ---	± ---
3 PLACES	± ---	± .010
2 PLACES	± 0.25	± ---
1 PLACE	± ---	± ---
ANGULAR ±1/2°		

DRAFT WHERE APPLICABLE MUST REMAIN WITHIN DIMENSIONS

DIMENSION STYLE: IN/MM
SCALE: NTS
DESIGN UNITS: INCH
THIRD ANGLE PROJECTION

DRAWN BY: DJB	DATE: 1991/10/21	TITLE: EARLY ENTRY R/A RECPT .120"PC TAIL W/O LOWER ROW PINSTOP-.100" GRID
CHECKED BY: DJB	DATE: 1991/10/21	
APPROVED BY: MLONG	DATE: 2010/01/14	MOLEX INCORPORATED
MATERIAL NO.: SEE TABLE		DOCUMENT NO.: SDA-71973-****
SIZE: A3		SHEET NO.: 6 OF 26

THIS DRAWING CONTAINS INFORMATION THAT IS PROPRIETARY TO MOLEX INCORPORATED AND SHOULD NOT BE USED WITHOUT WRITTEN PERMISSION

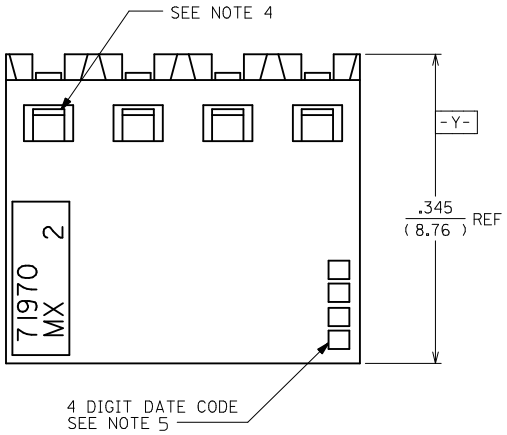

FINISHES

15 GOLD .000015 MINIMUM GOLD PLATE IN SELECT AREA OVER
.000050 MINIMUM NICKEL UNDERPLATE OVER-ALL WITH
.000075 MINIMUM TIN PLATE IN SELECT AREA.

30 GOLD .000030 MINIMUM GOLD PLATE IN SELECT AREA OVER
.000050 MINIMUM NICKEL UNDERPLATE OVER-ALL WITH
.000075 MINIMUM TIN PLATE IN SELECT AREA.

50 GOLD .000050 MINIMUM GOLD PLATE IN SELECT AREA OVER
.000050 MINIMUM NICKEL UNDERPLATE OVER-ALL WITH
.000100 MINIMUM TIN PLATE IN SELECT AREA.

NOTES:

1.) MATERIAL-
INSULATOR - LCP, UL 94V-0, COLOR BLACK
CONTACTS - PHOSPHOR BRONZE
2.) SEE SHT. 22 FOR CHART DIMENSIONS AND ITEM NO.'S
3.) RECOMMENDED MATING PIN LENGTH:
LOWER ROW - .200" MINIMUM, .250" MAX.
UPPER ROW - .200" MINIMUM
4.) REFER TO PRODUCT SPECIFICATION PS-71973-9999 FOR PERFORMANCE DATA
5.) MANUFACTURED DATE CODE - YEAR,WEEK.
6.) PACKAGING: FOR THIS PRODUCT IN TUBES SEE SHT. 26

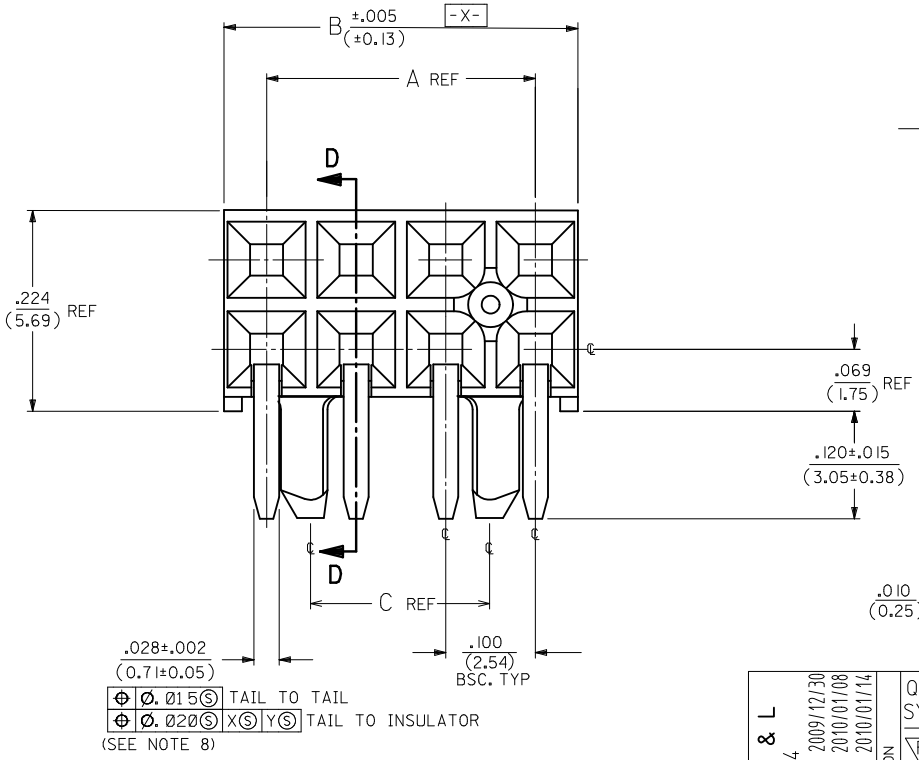

OPTION "L" ASSEMBLY

STANDARD HOUSING W/ PEGS

SECTION D-D

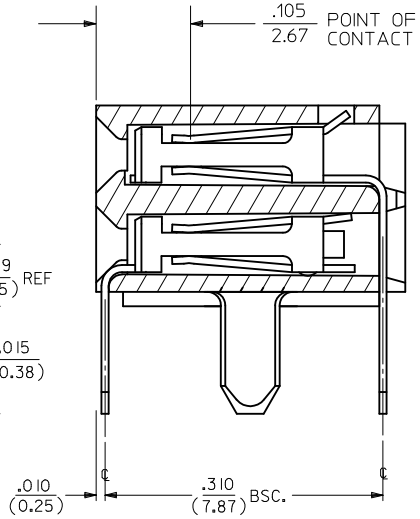

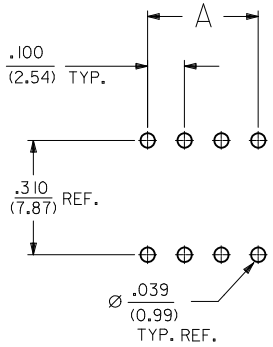

RECOMMENDED P.C.B. LAYOUT

ADD OPTION K & L	2009/12/30		
EC NO: S2010-0534	2010/01/08		
DRWN:SKANG	2010/01/14		
CH'KD:ATSEE			
APPR:MLONG			
K		DESCRIPTION	REV

QUALITY SYMBOLS: FA=0, FC=0, FP=0

GENERAL TOLERANCES (UNLESS SPECIFIED)

	mm	INCH
4 PLACES	± ---	± ---
3 PLACES	± ---	± .010
2 PLACES	± 0.25	± ---
1 PLACE	± ---	± ---
ANGULAR ±1/2°		

DRAFT WHERE APPLICABLE MUST REMAIN WITHIN DIMENSIONS

DIMENSION STYLE: IN/MM	SCALE: NTS	DESIGN UNITS: INCH	THIRD ANGLE PROJECTION
DRAWN BY: DJB	DATE: 1991/10/21	TITLE: EARLY ENTRY R/A RECPT .120"PC TAIL W/O LOWER ROW PINSTOP-.100" GRID	
CHECKED BY: DJB	DATE: 1991/10/21		
APPROVED BY: MLONG	DATE: 2010/01/14	molex MOLEX INCORPORATED	
MATERIAL NO.: SEE TABLE		DOCUMENT NO.: SDA-71973-****	SHEET NO.: 7 OF 26
SIZE: A3	THIS DRAWING CONTAINS INFORMATION THAT IS PROPRIETARY TO MOLEX INCORPORATED AND SHOULD NOT BE USED WITHOUT WRITTEN PERMISSION		

NO. OF CKTS PER ROW	NO. OF CKTS TOTAL		OPTION A ASSEMBLY PACKAGED IN TUBES PER PK-70873-0138 (SEE SHEET 1 FOR FINISH SPECIFICATIONS) 15 GOLD	30 GOLD	50 GOLD	DIMENSION A	DIMENSION B		
4	8		71973-0204	71973-0304	71973-0404	.300 (7.62)	.395 (10.03)		
5	10		71973-0205	71973-0305	71973-0405	.400 (10.16)	.495 (12.57)		
6	12		71973-0206	71973-0306	71973-0406	.500 (12.70)	.595 (15.11)		
7	14		71973-0207	71973-0307	71973-0407	.600 (15.24)	.695 (17.65)		
8	16		71973-0208	71973-0308	71973-0408	.700 (17.78)	.795 (20.19)		
9	18		71973-0209	71973-0309	71973-0409	.800 (20.32)	.895 (22.73)		
10	20		71973-0210	71973-0310	71973-0410	.900 (22.86)	.995 (25.27)		
11	22		71973-0211	71973-0311	71973-0411	1.000 (25.40)	1.095 (27.81)		
12	24		71973-0212	71973-0312	71973-0412	1.100 (27.94)	1.195 (30.35)		
13	26		71973-0213	71973-0313	71973-0413	1.200 (30.48)	1.295 (32.89)		
14	28		71973-0214	71973-0314	71973-0414	1.300 (33.02)	1.395 (35.43)		
15	30		71973-0215	71973-0315	71973-0415	1.400 (35.56)	1.495 (37.97)		
16	32		71973-0216	71973-0316	71973-0416	1.500 (38.10)	1.595 (40.51)		
17	34		71973-0217	71973-0317	71973-0417	1.600 (40.64)	1.695 (43.05)		
18	36		71973-0218	71973-0318	71973-0418	1.700 (43.18)	1.795 (45.59)		
19	38		71973-0219	71973-0319	71973-0419	1.800 (45.72)	1.895 (48.13)		
20	40		71973-0220	71973-0320	71973-0420	1.900 (48.26)	1.995 (50.67)		
21	42		71973-0221	71973-0321	71973-0421	2.000 (50.80)	2.095 (53.21)		
22	44		71973-0222	71973-0322	71973-0422	2.100 (53.34)	2.195 (55.75)		
23	46		71973-0223	71973-0323	71973-0423	2.200 (55.88)	2.295 (58.29)		
24	48		71973-0224	71973-0324	71973-0424	2.300 (58.42)	2.395 (60.83)		
25	50		71973-0225	71973-0325	71973-0425	2.400 (60.96)	2.495 (63.37)		
26	52		71973-0226	71973-0326	71973-0426	2.500 (63.50)	2.595 (65.91)		
27	54		71973-0227	71973-0327	71973-0427	2.600 (66.04)	2.695 (68.45)		
28	56		71973-0228	71973-0328	71973-0428	2.700 (68.58)	2.795 (70.99)		
29	58		71973-0229	71973-0329	71973-0429	2.800 (71.12)	2.895 (73.53)		
30	60		71973-0230	71973-0330	71973-0430	2.900 (73.66)	2.995 (76.07)		
31	62		71973-0231	71973-0331	71973-0431	3.000 (76.20)	3.095 (78.61)		
32	64		71973-0232	71973-0332	71973-0432	3.100 (78.74)	3.195 (81.15)		

NO. OF CKTS PER ROW	NO. OF CKTS TOTAL		OPTION A ASSEMBLY PACKAGED IN TUBES PER PK-70873-0138 (SEE SHEET 1 FOR FINISH SPECIFICATIONS) 15 GOLD	30 GOLD	50 GOLD	DIMENSION A	DIMENSION B		
33	66		71973-0233	71973-0333	71973-0433	3.200 (81.28)	3.295 (83.69)		
34	68		71973-0234	71973-0334	71973-0434	3.300 (83.82)	3.395 (86.23)		
35	70		71973-0235	71973-0335	71973-0435	3.400 (86.36)	3.495 (88.77)		
36	72		71973-0236	71973-0336	71973-0436	3.500 (88.90)	3.595 (91.31)		

REV	DESCRIPTION
K	ADD OPTION K & L EC NO: S2010-0534 DRWN:SKANG 2009/12/30 CH'KD:ATSEE 2010/01/08 APPR:MLONG 2010/01/14

QUALITY SYMBOLS
FA=0
FC=0
FP=0

GENERAL TOLERANCES (UNLESS SPECIFIED)

	mm	INCH
4 PLACES	± ---	± ---
3 PLACES	± ---	± .010
2 PLACES	± 0.25	± ---
1 PLACE	± ---	± ---
ANGULAR ±1/2°		

DRAFT WHERE APPLICABLE MUST REMAIN WITHIN DIMENSIONS

DIMENSION STYLE: IN/MM
SCALE: NTS
DESIGN UNITS: INCH
THIRD ANGLE PROJECTION

DRAWN BY: DJB DATE: 1991/10/21
CHECKED BY: DJB DATE: 1991/10/21
APPROVED BY: MLONG DATE: 2010/01/14

TITLE: EARLY ENTRY R/A RECPT .120"PC TAIL W/O LOWER ROW PINSTOP-.100" GRID

MOLEX INCORPORATED

MATERIAL NO.: SEE TABLE
DOCUMENT NO.: SDA-71973-****
SHEET NO.: 8 OF 26
SIZE: A3

THIS DRAWING CONTAINS INFORMATION THAT IS PROPRIETARY TO MOLEX INCORPORATED AND SHOULD NOT BE USED WITHOUT WRITTEN PERMISSION

NO. OF CKTS PER ROW	NO. OF CKTS TOTAL	OPTION B ASSEMBLY PACKAGED IN TUBES PER PK-70873-0139 (SEE SHEET 1 FOR PLATING SPECIFICATIONS) OPT. J ASSY 15 GOLD	15 GOLD	30 GOLD	50 GOLD	DIMENSION A	DIMENSION B	DIMENSION D
4	8		71973-1004	71973-1104	71973-1204	.300 (7.62)	.395 (10.03)	.658 (16.71)
5	10		71973-1005	71973-1105	71973-1205	.400 (10.16)	.495 (12.57)	.758 (19.25)
6	12		71973-1006	71973-1106	71973-1206	.500 (12.70)	.595 (15.11)	.858 (21.79)
7	14		71973-1007	71973-1107	71973-1207	.600 (15.24)	.695 (17.65)	.958 (24.33)
8	16		71973-1008	71973-1108	71973-1208	.700 (17.78)	.795 (20.19)	1.058 (26.87)
9	18		71973-1009	71973-1109	71973-1209	.800 (20.32)	.895 (22.73)	1.158 (29.41)
10	20		71973-1010	71973-1110	71973-1210	.900 (22.86)	.995 (25.27)	1.258 (31.95)
11	22		71973-1011	71973-1111	71973-1211	1.000 (25.40)	1.095 (27.81)	1.358 (34.49)
12	24		71973-1012	71973-1112	71973-1212	1.100 (27.94)	1.195 (30.35)	1.458 (37.03)
13	26		71973-1013	71973-1113	71973-1213	1.200 (30.48)	1.295 (32.89)	1.558 (39.57)
14	28		71973-1014	71973-1114	71973-1214	1.300 (33.02)	1.395 (35.43)	1.658 (42.11)
15	30	71973-1315	71973-1015	71973-1115	71973-1215	1.400 (35.56)	1.495 (37.97)	1.758 (44.65)
16	32		71973-1016	71973-1116	71973-1216	1.500 (38.10)	1.595 (40.51)	1.858 (47.19)
17	34		71973-1017	71973-1117	71973-1217	1.600 (40.64)	1.695 (43.05)	1.958 (49.73)
18	36		71973-1018	71973-1118	71973-1218	1.700 (43.18)	1.795 (45.59)	2.058 (52.27)
19	38		71973-1019	71973-1119	71973-1219	1.800 (45.72)	1.895 (48.13)	2.158 (54.81)
20	40	71973-1320	71973-1020	71973-1120	71973-1220	1.900 (48.26)	1.995 (50.67)	2.258 (57.35)
21	42		71973-1021	71973-1121	71973-1221	2.000 (50.80)	2.095 (53.21)	2.358 (59.89)
22	44		71973-1022	71973-1122	71973-1222	2.100 (53.34)	2.195 (55.75)	2.458 (62.43)
23	46		71973-1023	71973-1123	71973-1223	2.200 (55.88)	2.295 (58.29)	2.558 (64.97)
24	48		71973-1024	71973-1124	71973-1224	2.300 (58.42)	2.395 (60.83)	2.658 (67.51)
25	50		71973-1025	71973-1125	71973-1225	2.400 (60.96)	2.495 (63.37)	2.758 (70.05)
26	52		71973-1026	71973-1126	71973-1226	2.500 (63.50)	2.595 (65.91)	2.858 (72.59)
27	54		71973-1027	71973-1127	71973-1227	2.600 (66.04)	2.695 (68.45)	2.958 (75.13)
28	56		71973-1028	71973-1128	71973-1228	2.700 (68.58)	2.795 (70.99)	3.058 (77.67)
29	58		71973-1029	71973-1129	71973-1229	2.800 (71.12)	2.895 (73.53)	3.158 (80.21)
30	60		71973-1030	71973-1130	71973-1230	2.900 (73.66)	2.995 (76.07)	3.258 (82.75)
31	62		71973-1031	71973-1131	71973-1231	3.000 (76.20)	3.095 (78.61)	3.358 (85.29)
32	64		71973-1032	71973-1132	71973-1232	3.100 (78.74)	3.195 (81.15)	3.458 (87.83)

NO. OF CKTS PER ROW	NO. OF CKTS TOTAL	OPTION B ASSEMBLY PACKAGED IN TUBES PER PK-70873-0139 (SEE SHEET 1 FOR PLATING SPECIFICATIONS) OPT. J ASSY 15 GOLD	15 GOLD	30 GOLD	50 GOLD	DIMENSION A	DIMENSION B	DIMENSION D
33	66		71973-1033	71973-1133	71973-1233	3.200 (81.28)	3.295 (83.69)	3.558 (90.37)
34	68		71973-1034	71973-1134	71973-1234	3.300 (83.82)	3.395 (86.23)	3.658 (92.91)
35	70		71973-1035	71973-1135	71973-1235	3.400 (86.36)	3.495 (88.77)	3.758 (95.45)
36	72		71973-1036	71973-1136	71973-1236	3.500 (88.90)	3.595 (91.31)	3.858 (97.99)

OPTION "J" IS THE SAME AS "B" EXCEPT DATE CODE IS NOT STAMPED ON HOUSING.

ADD OPTION K & L
EC NO: S2010-0534
DRWN:SKANG 2009/12/30
CH'KD:ATSEE 2010/01/08
APPR:MLONG 2010/01/14
DESCRIPTION
K
REV

QUALITY SYMBOLS
FA=0
FC=0
FP=0

GENERAL TOLERANCES (UNLESS SPECIFIED)

	mm	INCH
4 PLACES	± ---	± ---
3 PLACES	± ---	± .010
2 PLACES	± 0.25	± ---
1 PLACE	± ---	± ---
ANGULAR ±1/2°		

DRAFT WHERE APPLICABLE MUST REMAIN WITHIN DIMENSIONS

DIMENSION STYLE: IN/MM
SCALE: NTS
DESIGN UNITS: INCH
THIRD ANGLE PROJECTION

DRAWN BY: DJB DATE: 1991/10/21
CHECKED BY: DJB DATE: 1991/10/21
APPROVED BY: MLONG DATE: 2010/01/14

TITLE: EARLY ENTRY R/A RECPT .120"PC TAIL W/O LOWER ROW PINSTOP-.100" GRID

MOLEX INCORPORATED

MATERIAL NO.: SEE TABLE
DOCUMENT NO.: SDA-71973-****
SHEET NO.: 9 OF 26
SIZE: A3

THIS DRAWING CONTAINS INFORMATION THAT IS PROPRIETARY TO MOLEX INCORPORATED AND SHOULD NOT BE USED WITHOUT WRITTEN PERMISSION

NO. OF CKTS PER ROW	NO. OF CKTS TOTAL	OPTION A ASSEMBLY PACKAGED IN TRAYS PER PK-70873-0239 (SEE SHEET 1 FOR FINISH SPECIFICATIONS) 15 GOLD	30 GOLD	50 GOLD	DIMENSION A	DIMENSION B
4	8	71973-6604	71973-6704	71973-6804	.300 (7.62)	.395 (10.03)
5	10	71973-6605	71973-6705	71973-6805	.400 (10.16)	.495 (12.57)
6	12	71973-6606	71973-6706	71973-6806	.500 (12.70)	.595 (15.11)
7	14	71973-6607	71973-6707	71973-6807	.600 (15.24)	.695 (17.65)
8	16	71973-6608	71973-6708	71973-6808	.700 (17.78)	.795 (20.19)
9	18	71973-6609	71973-6709	71973-6809	.800 (20.32)	.895 (22.73)
10	20	71973-6610	71973-6710	71973-6810	.900 (22.86)	.995 (25.27)
11	22	71973-6611	71973-6711	71973-6811	1.000 (25.40)	1.095 (27.81)
12	24	71973-6612	71973-6712	71973-6812	1.100 (27.94)	1.195 (30.35)
13	26	71973-6613	71973-6713	71973-6813	1.200 (30.48)	1.295 (32.89)
14	28	71973-6614	71973-6714	71973-6814	1.300 (33.02)	1.395 (35.43)
15	30	71973-6615	71973-6715	71973-6815	1.400 (35.56)	1.495 (37.97)
16	32	71973-6616	71973-6716	71973-6816	1.500 (38.10)	1.595 (40.51)
17	34	71973-6617	71973-6717	71973-6817	1.600 (40.64)	1.695 (43.05)
18	36	71973-6618	71973-6718	71973-6818	1.700 (43.18)	1.795 (45.59)
19	38	71973-6619	71973-6719	71973-6819	1.800 (45.72)	1.895 (48.13)
20	40	71973-6620	71973-6720	71973-6820	1.900 (48.26)	1.995 (50.67)
21	42	71973-6621	71973-6721	71973-6821	2.000 (50.80)	2.095 (53.21)
22	44	71973-6622	71973-6722	71973-6822	2.100 (53.34)	2.195 (55.75)
23	46	71973-6623	71973-6723	71973-6823	2.200 (55.88)	2.295 (58.29)
24	48	71973-6624	71973-6724	71973-6824	2.300 (58.42)	2.395 (60.83)
25	50	71973-6625	71973-6725	71973-6825	2.400 (60.96)	2.495 (63.37)
26	52	71973-6626	71973-6726	71973-6826	2.500 (63.50)	2.595 (65.91)
27	54	71973-6627	71973-6727	71973-6827	2.600 (66.04)	2.695 (68.45)
28	56	71973-6628	71973-6728	71973-6828	2.700 (68.58)	2.795 (70.99)
29	58	71973-6629	71973-6729	71973-6829	2.800 (71.12)	2.895 (73.53)
30	60	71973-6630	71973-6730	71973-6830	2.900 (73.66)	2.995 (76.07)
31	62	71973-6631	71973-6731	71973-6831	3.000 (76.20)	3.095 (78.61)
32	64	71973-6632	71973-6732	71973-6832	3.100 (78.74)	3.195 (81.15)

NO. OF CKTS PER ROW	NO. OF CKTS TOTAL	OPTION A ASSEMBLY PACKAGED IN TRAYS PER PK-70873-0239 (SEE SHEET 1 FOR FINISH SPECIFICATIONS) 15 GOLD	30 GOLD	50 GOLD	DIMENSION A	DIMENSION B
33	66	71973-6633	71973-6733	71973-6833	3.200 (81.28)	3.295 (83.69)
34	68	71973-6634	71973-6734	71973-6834	3.300 (83.82)	3.395 (86.23)
35	70	71973-6635	71973-6735	71973-6835	3.400 (86.36)	3.495 (88.77)
36	72	71973-6636	71973-6736	71973-6836	3.500 (88.90)	3.595 (91.31)

REV	DESCRIPTION
K	ADD OPTION K & L EC NO: S2010-0534 DRWN:SKANG 2009/12/30 CH'KD:ATSEE 2010/01/08 APPR:MLONG 2010/01/14

QUALITY SYMBOLS
FA=0
FC=0
FP=0

GENERAL TOLERANCES (UNLESS SPECIFIED)

	mm	INCH
4 PLACES	± ---	± ---
3 PLACES	± ---	± .010
2 PLACES	± 0.25	± ---
1 PLACE	± ---	± ---
ANGULAR ±1/2°		

DRAFT WHERE APPLICABLE MUST REMAIN WITHIN DIMENSIONS

DIMENSION STYLE: IN/MM
SCALE: NTS
DESIGN UNITS: INCH
THIRD ANGLE PROJECTION

DRAWN BY: DJB	DATE: 1991/10/21	TITLE: EARLY ENTRY R/A RECPT .120"PC TAIL W/O LOWER ROW PINSTOP-.100" GRID
CHECKED BY: DJB	DATE: 1991/10/21	
APPROVED BY: MLONG	DATE: 2010/01/14	molex MOLEX INCORPORATED
MATERIAL NO.: SEE TABLE		DOCUMENT NO.: SDA-71973-****
SIZE: A3		SHEET NO.: 10 OF 26

THIS DRAWING CONTAINS INFORMATION THAT IS PROPRIETARY TO MOLEX INCORPORATED AND SHOULD NOT BE USED WITHOUT WRITTEN PERMISSION

NO. OF CKTS PER ROW	NO. OF CKTS TOTAL	OPTION B ASSEMBLY PACKAGED IN TRAYS PER PK-70873-0239 (SEE SHEET 1 FOR FINISH SPECIFICATIONS) 15 GOLD	30 GOLD	50 GOLD	DIMENSION A	DIMENSION B	DIMENSION D
4	8	71973-7004	71973-7104	71973-7204	.300 (7.62)	.395 (10.03)	.658 (16.71)
5	10	71973-7005	71973-7105	71973-7205	.400 (10.16)	.495 (12.57)	.758 (19.25)
6	12	71973-7006	71973-7106	71973-7206	.500 (12.70)	.595 (15.11)	.858 (21.79)
7	14	71973-7007	71973-7107	71973-7207	.600 (15.24)	.695 (17.65)	.958 (24.33)
8	16	71973-7008	71973-7108	71973-7208	.700 (17.78)	.795 (20.19)	1.058 (26.87)
9	18	71973-7009	71973-7109	71973-7209	.800 (20.32)	.895 (22.73)	1.158 (29.41)
10	20	71973-7010	71973-7110	71973-7210	.900 (22.86)	.995 (25.27)	1.258 (31.95)
11	22	71973-7011	71973-7111	71973-7211	1.000 (25.40)	1.095 (27.81)	1.358 (34.49)
12	24	71973-7012	71973-7112	71973-7212	1.100 (27.94)	1.195 (30.35)	1.458 (37.03)
13	26	71973-7013	71973-7113	71973-7213	1.200 (30.48)	1.295 (32.89)	1.558 (39.57)
14	28	71973-7014	71973-7114	71973-7214	1.300 (33.02)	1.395 (35.43)	1.658 (42.11)
15	30	71973-7015	71973-7115	71973-7215	1.400 (35.56)	1.495 (37.97)	1.758 (44.65)
16	32	71973-7016	71973-7116	71973-7216	1.500 (38.10)	1.595 (40.51)	1.858 (47.19)
17	34	71973-7017	71973-7117	71973-7217	1.600 (40.64)	1.695 (43.05)	1.958 (49.73)
18	36	71973-7018	71973-7118	71973-7218	1.700 (43.18)	1.795 (45.59)	2.058 (52.27)
19	38	71973-7019	71973-7119	71973-7219	1.800 (45.72)	1.895 (48.13)	2.158 (54.81)
20	40	71973-7020	71973-7120	71973-7220	1.900 (48.26)	1.995 (50.67)	2.258 (57.35)
21	42	71973-7021	71973-7121	71973-7221	2.000 (50.80)	2.095 (53.21)	2.358 (59.89)
22	44	71973-7022	71973-7122	71973-7222	2.100 (53.34)	2.195 (55.75)	2.458 (62.43)
23	46	71973-7023	71973-7123	71973-7223	2.200 (55.88)	2.295 (58.29)	2.558 (64.97)
24	48	71973-7024	71973-7124	71973-7224	2.300 (58.42)	2.395 (60.83)	2.658 (67.51)
25	50	71973-7025	71973-7125	71973-7225	2.400 (60.96)	2.495 (63.37)	2.758 (70.05)
26	52	71973-7026	71973-7126	71973-7226	2.500 (63.50)	2.595 (65.91)	2.858 (72.59)
27	54	71973-7027	71973-7127	71973-7227	2.600 (66.04)	2.695 (68.45)	2.958 (75.13)
28	56	71973-7028	71973-7128	71973-7228	2.700 (68.58)	2.795 (70.99)	3.058 (77.67)
29	58	71973-7029	71973-7129	71973-7229	2.800 (71.12)	2.895 (73.53)	3.158 (80.21)
30	60	71973-7030	71973-7130	71973-7230	2.900 (73.66)	2.995 (76.07)	3.258 (82.75)
31	62	71973-7031	71973-7131	71973-7231	3.000 (76.20)	3.095 (78.61)	3.358 (85.29)
32	64	71973-7032	71973-7132	71973-7232	3.100 (78.74)	3.195 (81.15)	3.458 (87.83)

NO. OF CKTS PER ROW	NO. OF CKTS TOTAL	OPTION B ASSEMBLY PACKAGED IN TRAYS PER PK-70873-0239 (SEE SHEET 1 FOR FINISH SPECIFICATIONS) 15 GOLD	30 GOLD	50 GOLD	DIMENSION A	DIMENSION B	DIMENSION D
33	66	71973-7033	71973-7133	71973-7233	3.200 (81.28)	3.295 (83.69)	3.558 (90.37)
34	68	71973-7034	71973-7134	71973-7234	3.300 (83.82)	3.395 (86.23)	3.658 (92.91)
35	70	71973-7035	71973-7135	71973-7235	3.400 (86.36)	3.495 (88.77)	3.758 (95.45)
36	72	71973-7036	71973-7136	71973-7236	3.500 (88.90)	3.595 (91.31)	3.858 (97.99)

REV	DESCRIPTION
K	ADD OPTION K & L EC NO: S2010-0534 DRWN:SKANG 2009/12/30 CH'KD:ATSEE 2010/01/08 APPR:MLONG 2010/01/14

QUALITY SYMBOLS
FA=0
FC=0
FP=0

GENERAL TOLERANCES (UNLESS SPECIFIED)

	mm	INCH
4 PLACES	± ---	± ---
3 PLACES	± ---	± .010
2 PLACES	± 0.25	± ---
1 PLACE	± ---	± ---
ANGULAR ±1/2°		

DRAFT WHERE APPLICABLE MUST REMAIN WITHIN DIMENSIONS

DIMENSION STYLE: IN/MM
SCALE: NTS
DESIGN UNITS: INCH
THIRD ANGLE PROJECTION

DRAWN BY: DJB DATE: 1991/10/21
CHECKED BY: DJB DATE: 1991/10/21
APPROVED BY: MLONG DATE: 2010/01/14

TITLE: EARLY ENTRY R/A RECPT .120"PC TAIL W/O LOWER ROW PINSTOP-.100" GRID

MOLEX INCORPORATED

MATERIAL NO.: SEE TABLE
DOCUMENT NO.: SDA-71973-****
SHEET NO.: 11 OF 26
SIZE: A3

THIS DRAWING CONTAINS INFORMATION THAT IS PROPRIETARY TO MOLEX INCORPORATED AND SHOULD NOT BE USED WITHOUT WRITTEN PERMISSION

NO. OF CKTS PER ROW	NO. OF CKTS TOTAL		OPTION C ASSEMBLY PACKAGED IN TUBES PER PK-70873-0138 (SEE SHEET 1 FOR FINISH SPECIFICATIONS) 15 GOLD		30 GOLD		50 GOLD	DIMENSION A	DIMENSION B		
4	8			X	71973-1804	X	71973-1904	X	71973-2004	.300 (7.62)	.395 (10.03)
5	10			X	71973-1805	X	71973-1905	X	71973-2005	.400 (10.16)	.495 (12.57)
6	12			X	71973-1806	X	71973-1906	X	71973-2006	.500 (12.70)	.595 (15.11)
7	14			X	71973-1807	X	71973-1907	X	71973-2007	.600 (15.24)	.695 (17.65)
8	16			X	71973-1808	X	71973-1908	X	71973-2008	.700 (17.78)	.795 (20.19)
9	18			X	71973-1809	X	71973-1909	X	71973-2009	.800 (20.32)	.895 (22.73)
10	20			X	71973-1810	X	71973-1910	X	71973-2010	.900 (22.86)	.995 (25.27)
11	22			X	71973-1811	X	71973-1911	X	71973-2011	1.000 (25.40)	1.095 (27.81)
12	24			X	71973-1812	X	71973-1912	X	71973-2012	1.100 (27.94)	1.195 (30.35)
13	26			X	71973-1813	X	71973-1913	X	71973-2013	1.200 (30.48)	1.295 (32.89)
14	28			X	71973-1814	X	71973-1914	X	71973-2014	1.300 (33.02)	1.395 (35.43)
15	30			X	71973-1815	X	71973-1915	X	71973-2015	1.400 (35.56)	1.495 (37.97)
16	32			X	71973-1816	X	71973-1916	X	71973-2016	1.500 (38.10)	1.595 (40.51)
17	34			X	71973-1817	X	71973-1917	X	71973-2017	1.600 (40.64)	1.695 (43.05)
18	36			X	71973-1818	X	71973-1918	X	71973-2018	1.700 (43.18)	1.795 (45.59)
19	38			X	71973-1819	X	71973-1919	X	71973-2019	1.800 (45.72)	1.895 (48.13)
20	40			X	71973-1820	X	71973-1920	X	71973-2020	1.900 (48.26)	1.995 (50.67)
21	42			X	71973-1821	X	71973-1921	X	71973-2021	2.000 (50.80)	2.095 (53.21)
22	44			X	71973-1822	X	71973-1922	X	71973-2022	2.100 (53.34)	2.195 (55.75)
23	46			X	71973-1823	X	71973-1923	X	71973-2023	2.200 (55.88)	2.295 (58.29)
24	48			X	71973-1824	X	71973-1924	X	71973-2024	2.300 (58.42)	2.395 (60.83)
25	50			X	71973-1825	X	71973-1925	X	71973-2025	2.400 (60.96)	2.495 (63.37)
26	52			X	71973-1826	X	71973-1926	X	71973-2026	2.500 (63.50)	2.595 (65.91)
27	54			X	71973-1827	X	71973-1927	X	71973-2027	2.600 (66.04)	2.695 (68.45)
28	56			X	71973-1828	X	71973-1928	X	71973-2028	2.700 (68.58)	2.795 (70.99)
29	58			X	71973-1829	X	71973-1929	X	71973-2029	2.800 (71.12)	2.895 (73.53)
30	60			X	71973-1830	X	71973-1930	X	71973-2030	2.900 (73.66)	2.995 (76.07)
31	62			X	71973-1831	X	71973-1931	X	71973-2031	3.000 (76.20)	3.095 (78.61)
32	64			X	71973-1832	X	71973-1932	X	71973-2032	3.100 (78.74)	3.195 (81.15)

NO. OF CKTS PER ROW	NO. OF CKTS TOTAL		OPTION C ASSEMBLY PACKAGED IN TUBES PER PK-70873-0138 (SEE SHEET 1 FOR FINISH SPECIFICATIONS) 15 GOLD		30 GOLD		50 GOLD	DIMENSION A	DIMENSION B		
33	66			X	71973-1833	X	71973-1933	X	71973-2033	3.200 (81.28)	3.295 (83.69)
34	68			X	71973-1834	X	71973-1934	X	71973-2034	3.300 (83.82)	3.395 (86.23)
35	70			X	71973-1835	X	71973-1935	X	71973-2035	3.400 (86.36)	3.495 (88.77)
36	72			X	71973-1836	X	71973-1936	X	71973-2036	3.500 (88.90)	3.595 (91.31)

"X" INDICATES TOOLING IS NOT AVAILABLE

ADD OPTION K & L
EC NO: S2010-0534
DRWN:SKANG 2009/12/30
CH'KD:ATSEE 2010/01/08
APPR:MLONG 2010/01/14
DESCRIPTION
K
REV

QUALITY SYMBOLS
FA=0
FC=0
FP=0

GENERAL TOLERANCES (UNLESS SPECIFIED)

	mm	INCH
4 PLACES	± ---	± ---
3 PLACES	± ---	± .010
2 PLACES	± 0.25	± ---
1 PLACE	± ---	± ---
ANGULAR ±1/2°		

DRAFT WHERE APPLICABLE MUST REMAIN WITHIN DIMENSIONS

DIMENSION STYLE: IN/MM
SCALE: NTS
DESIGN UNITS: INCH
THIRD ANGLE PROJECTION

DRAWN BY: DJB DATE: 1991/10/21
CHECKED BY: DJB DATE: 1991/10/21
APPROVED BY: MLONG DATE: 2010/01/14

TITLE: EARLY ENTRY R/A RECPT .120"PC TAIL W/O LOWER ROW PINSTOP-.100" GRID

MOLEX INCORPORATED

MATERIAL NO.: SEE TABLE
DOCUMENT NO.: SDA-71973-****
SHEET NO.: 12 OF 26
SIZE: A3

THIS DRAWING CONTAINS INFORMATION THAT IS PROPRIETARY TO MOLEX INCORPORATED AND SHOULD NOT BE USED WITHOUT WRITTEN PERMISSION

NO. OF CKTS PER ROW	NO. OF CKTS TOTAL		OPTION D ASSEMBLY PACKAGED IN TUBES PER PK-70873-0139 (SEE SHEET 1 FOR FINISH SPECIFICATIONS) 15 GOLD		30 GOLD		50 GOLD	DIMENSION A	DIMENSION B		DIMENSION D
4	8		X 71973-2604	X	71973-2704	X	71973-2804	.300 (7.62)	.395 (10.03)		.658 (16.71)
5	10		X 71973-2605	X	71973-2705	X	71973-2805	.400 (10.16)	.495 (12.57)		.758 (19.25)
6	12		X 71973-2606	X	71973-2706	X	71973-2806	.500 (12.70)	.595 (15.11)		.858 (21.79)
7	14		X 71973-2607	X	71973-2707	X	71973-2807	.600 (15.24)	.695 (17.65)		.958 (24.33)
8	16		X 71973-2608	X	71973-2708	X	71973-2808	.700 (17.78)	.795 (20.19)		1.058 (26.87)
9	18		X 71973-2609	X	71973-2709	X	71973-2809	.800 (20.32)	.895 (22.73)		1.158 (29.41)
10	20		X 71973-2610	X	71973-2710	X	71973-2810	.900 (22.86)	.995 (25.27)		1.258 (31.95)
11	22		X 71973-2611	X	71973-2711	X	71973-2811	1.000 (25.40)	1.095 (27.81)		1.358 (34.49)
12	24		X 71973-2612	X	71973-2712	X	71973-2812	1.100 (27.94)	1.195 (30.35)		1.458 (37.03)
13	26		X 71973-2613	X	71973-2713	X	71973-2813	1.200 (30.48)	1.295 (32.89)		1.558 (39.57)
14	28		X 71973-2614	X	71973-2714	X	71973-2814	1.300 (33.02)	1.395 (35.43)		1.658 (42.11)
15	30		X 71973-2615	X	71973-2715	X	71973-2815	1.400 (35.56)	1.495 (37.97)		1.758 (44.65)
16	32		X 71973-2616	X	71973-2716	X	71973-2816	1.500 (38.10)	1.595 (40.51)		1.858 (47.19)
17	34		X 71973-2617	X	71973-2717	X	71973-2817	1.600 (40.64)	1.695 (43.05)		1.958 (49.73)
18	36		X 71973-2618	X	71973-2718	X	71973-2818	1.700 (43.18)	1.795 (45.59)		2.058 (52.27)
19	38		X 71973-2619	X	71973-2719	X	71973-2819	1.800 (45.72)	1.895 (48.13)		2.158 (54.81)
20	40		X 71973-2620	X	71973-2720	X	71973-2820	1.900 (48.26)	1.995 (50.67)		2.258 (57.35)
21	42		X 71973-2621	X	71973-2721	X	71973-2821	2.000 (50.80)	2.095 (53.21)		2.358 (59.89)
22	44		X 71973-2622	X	71973-2722	X	71973-2822	2.100 (53.34)	2.195 (55.75)		2.458 (62.43)
23	46		X 71973-2623	X	71973-2723	X	71973-2823	2.200 (55.88)	2.295 (58.29)		2.558 (64.97)
24	48		X 71973-2624	X	71973-2724	X	71973-2824	2.300 (58.42)	2.395 (60.83)		2.658 (67.51)
25	50		X 71973-2625	X	71973-2725	X	71973-2825	2.400 (60.96)	2.495 (63.37)		2.758 (70.05)
26	52		X 71973-2626	X	71973-2726	X	71973-2826	2.500 (63.50)	2.595 (65.91)		2.858 (72.59)
27	54		X 71973-2627	X	71973-2727	X	71973-2827	2.600 (66.04)	2.695 (68.45)		2.958 (75.13)
28	56		X 71973-2628	X	71973-2728	X	71973-2828	2.700 (68.58)	2.795 (70.99)		3.058 (77.67)
29	58		X 71973-2629	X	71973-2729	X	71973-2829	2.800 (71.12)	2.895 (73.53)		3.158 (80.21)
30	60		X 71973-2630	X	71973-2730	X	71973-2830	2.900 (73.66)	2.995 (76.07)		3.258 (82.75)
31	62		X 71973-2631	X	71973-2731	X	71973-2831	3.000 (76.20)	3.095 (78.61)		3.358 (85.29)
32	64		X 71973-2632	X	71973-2732	X	71973-2832	3.100 (78.74)	3.195 (81.15)		3.458 (87.83)

NO. OF CKTS PER ROW	NO. OF CKTS TOTAL		OPTION D ASSEMBLY PACKAGED IN TUBES PER PK-70873-0139 (SEE SHEET 1 FOR FINISH SPECIFICATIONS) 15 GOLD		30 GOLD		50 GOLD	DIMENSION A	DIMENSION B		DIMENSION D
33	66		X 71973-2633	X	71973-2733	X	71973-2833	3.200 (81.28)	3.295 (83.69)		3.558 (90.37)
34	68		X 71973-2634	X	71973-2734	X	71973-2834	3.300 (83.82)	3.395 (86.23)		3.658 (92.91)
35	70		X 71973-2635	X	71973-2735	X	71973-2835	3.400 (86.36)	3.495 (88.77)		3.758 (95.45)
36	72		X 71973-2636	X	71973-2736	X	71973-2836	3.500 (88.90)	3.595 (91.31)		3.858 (97.99)

"X" INDICATES TOOLING IS NOT AVAILABLE

REV	DESCRIPTION	DRWN	CH'KD	APPR	DATE
K	ADD OPTION K & L EC NO: S2010-0534	SKANG	ATSEE	MLONG	2009/12/30 2010/01/08 2010/01/14

QUALITY SYMBOLS: FA=0, FC=0, FP=0

GENERAL TOLERANCES (UNLESS SPECIFIED)

	mm	INCH
4 PLACES	± ---	± ---
3 PLACES	± ---	± .010
2 PLACES	± 0.25	± ---
1 PLACE	± ---	± ---
ANGULAR ±1/2°		

DRAFT WHERE APPLICABLE MUST REMAIN WITHIN DIMENSIONS

DIMENSION STYLE: IN/MM

SCALE: NTS

DESIGN UNITS: INCH

THIRD ANGLE PROJECTION

DRAWN BY: DJB	DATE: 1991/10/21	
CHECKED BY: DJB	DATE: 1991/10/21	
APPROVED BY: MLONG	DATE: 2010/01/14	

TITLE: EARLY ENTRY R/A RECPT .120"PC TAIL W/O LOWER ROW PINSTOP-.100" GRID

MOLEX INCORPORATED

MATERIAL NO.: SEE TABLE

DOCUMENT NO.: SDA-71973-****

SHEET NO.: 13 OF 26

SIZE: A3

THIS DRAWING CONTAINS INFORMATION THAT IS PROPRIETARY TO MOLEX INCORPORATED AND SHOULD NOT BE USED WITHOUT WRITTEN PERMISSION

NO. OF CKTS PER ROW	NO. OF CKTS TOTAL	OPTION C ASSEMBLY PACKAGED IN TRAYS PER PK-70873-0239 (SEE SHEET 1 FOR FINISH SPECIFICATIONS) 15 GOLD	30 GOLD	50 GOLD	DIMENSION A	DIMENSION B
4	8	71973-7404	71973-7504	71973-7604	.300 (7.62)	.395 (10.03)
5	10	71973-7405	71973-7505	71973-7605	.400 (10.16)	.495 (12.57)
6	12	71973-7406	71973-7506	71973-7606	.500 (12.70)	.595 (15.11)
7	14	71973-7407	71973-7507	71973-7607	.600 (15.24)	.695 (17.65)
8	16	71973-7408	71973-7508	71973-7608	.700 (17.78)	.795 (20.19)
9	18	71973-7409	71973-7509	71973-7609	.800 (20.32)	.895 (22.73)
10	20	71973-7410	71973-7510	71973-7610	.900 (22.86)	.995 (25.27)
11	22	71973-7411	71973-7511	71973-7611	1.000 (25.40)	1.095 (27.81)
12	24	71973-7412	71973-7512	71973-7612	1.100 (27.94)	1.195 (30.35)
13	26	71973-7413	71973-7513	71973-7613	1.200 (30.48)	1.295 (32.89)
14	28	71973-7414	71973-7514	71973-7614	1.300 (33.02)	1.395 (35.43)
15	30	71973-7415	71973-7515	71973-7615	1.400 (35.56)	1.495 (37.97)
16	32	71973-7416	71973-7516	71973-7616	1.500 (38.10)	1.595 (40.51)
17	34	71973-7417	71973-7517	71973-7617	1.600 (40.64)	1.695 (43.05)
18	36	71973-7418	71973-7518	71973-7618	1.700 (43.18)	1.795 (45.59)
19	38	71973-7419	71973-7519	71973-7619	1.800 (45.72)	1.895 (48.13)
20	40	71973-7420	71973-7520	71973-7620	1.900 (48.26)	1.995 (50.67)
21	42	71973-7421	71973-7521	71973-7621	2.000 (50.80)	2.095 (53.21)
22	44	71973-7422	71973-7522	71973-7622	2.100 (53.34)	2.195 (55.75)
23	46	71973-7423	71973-7523	71973-7623	2.200 (55.88)	2.295 (58.29)
24	48	71973-7424	71973-7524	71973-7624	2.300 (58.42)	2.395 (60.83)
25	50	71973-7425	71973-7525	71973-7625	2.400 (60.96)	2.495 (63.37)
26	52	71973-7426	71973-7526	71973-7626	2.500 (63.50)	2.595 (65.91)
27	54	71973-7427	71973-7527	71973-7627	2.600 (66.04)	2.695 (68.45)
28	56	71973-7428	71973-7528	71973-7628	2.700 (68.58)	2.795 (70.99)
29	58	71973-7429	71973-7529	71973-7629	2.800 (71.12)	2.895 (73.53)
30	60	71973-7430	71973-7530	71973-7630	2.900 (73.66)	2.995 (76.07)
31	62	71973-7431	71973-7531	71973-7631	3.000 (76.20)	3.095 (78.61)
32	64	71973-7432	71973-7532	71973-7632	3.100 (78.74)	3.195 (81.15)

NO. OF CKTS PER ROW	NO. OF CKTS TOTAL	OPTION C ASSEMBLY PACKAGED IN TRAYS PER PK-70873-0239 (SEE SHEET 1 FOR FINISH SPECIFICATIONS) 15 GOLD	30 GOLD	50 GOLD	DIMENSION A	DIMENSION B
33	66	71973-7433	71973-7533	71973-7633	3.200 (81.28)	3.295 (83.69)
34	68	71973-7434	71973-7534	71973-7634	3.300 (83.82)	3.395 (86.23)
35	70	71973-7435	71973-7535	71973-7635	3.400 (86.36)	3.495 (88.77)
36	72	71973-7436	71973-7536	71973-7636	3.500 (88.90)	3.595 (91.31)

REV	DESCRIPTION
K	ADD OPTION K & L EC NO: S2010-0534 DRWN:SKANG 2009/12/30 CH'KD:ATSEE 2010/01/08 APPR:MLONG 2010/01/14

QUALITY SYMBOLS
FA=0
FC=0
FP=0

GENERAL TOLERANCES (UNLESS SPECIFIED)

	mm	INCH
4 PLACES	± ---	± ---
3 PLACES	± ---	± .010
2 PLACES	± 0.25	± ---
1 PLACE	± ---	± ---
ANGULAR ±1/2°		

DRAFT WHERE APPLICABLE MUST REMAIN WITHIN DIMENSIONS

DIMENSION STYLE: IN/MM
SCALE: NTS
DESIGN UNITS: INCH
THIRD ANGLE PROJECTION

DRAWN BY: DJB DATE: 1991/10/21
CHECKED BY: DJB DATE: 1991/10/21
APPROVED BY: MLONG DATE: 2010/01/14

TITLE: EARLY ENTRY R/A RECPT .120"PC TAIL W/O LOWER ROW PINSTOP-.100" GRID

molex MOLEX INCORPORATED

MATERIAL NO.: SEE TABLE
DOCUMENT NO.: SDA-71973-****
SHEET NO.: 14 OF 26
SIZE: A3

THIS DRAWING CONTAINS INFORMATION THAT IS PROPRIETARY TO MOLEX INCORPORATED AND SHOULD NOT BE USED WITHOUT WRITTEN PERMISSION

NO. OF CKTS PER ROW	NO. OF CKTS TOTAL	OPTION D ASSEMBLY PACKAGED IN TRAYS PER PK-70873-0239 (SEE SHEET 1 FOR FINISH SPECIFICATIONS) 15 GOLD	30 GOLD	50 GOLD	DIMENSION A	DIMENSION B	DIMENSION D
4	8	71973-7804	71973-7904	71973-8004	.300 (7.62)	.395 (10.03)	.658 (16.71)
5	10	71973-7805	71973-7905	71973-8005	.400 (10.16)	.495 (12.57)	.758 (19.25)
6	12	71973-7806	71973-7906	71973-8006	.500 (12.70)	.595 (15.11)	.858 (21.79)
7	14	71973-7807	71973-7907	71973-8007	.600 (15.24)	.695 (17.65)	.958 (24.33)
8	16	71973-7808	71973-7908	71973-8008	.700 (17.78)	.795 (20.19)	1.058 (26.87)
9	18	71973-7809	71973-7909	71973-8009	.800 (20.32)	.895 (22.73)	1.158 (29.41)
10	20	71973-7810	71973-7910	71973-8010	.900 (22.86)	.995 (25.27)	1.258 (31.95)
11	22	71973-7811	71973-7911	71973-8011	1.000 (25.40)	1.095 (27.81)	1.358 (34.49)
12	24	71973-7812	71973-7912	71973-8012	1.100 (27.94)	1.195 (30.35)	1.458 (37.03)
13	26	71973-7813	71973-7913	71973-8013	1.200 (30.48)	1.295 (32.89)	1.558 (39.57)
14	28	71973-7814	71973-7914	71973-8014	1.300 (33.02)	1.395 (35.43)	1.658 (42.11)
15	30	71973-7815	71973-7915	71973-8015	1.400 (35.56)	1.495 (37.97)	1.758 (44.65)
16	32	71973-7816	71973-7916	71973-8016	1.500 (38.10)	1.595 (40.51)	1.858 (47.19)
17	34	71973-7817	71973-7917	71973-8017	1.600 (40.64)	1.695 (43.05)	1.958 (49.73)
18	36	71973-7818	71973-7918	71973-8018	1.700 (43.18)	1.795 (45.59)	2.058 (52.27)
19	38	71973-7819	71973-7919	71973-8019	1.800 (45.72)	1.895 (48.13)	2.158 (54.81)
20	40	71973-7820	71973-7920	71973-8020	1.900 (48.26)	1.995 (50.67)	2.258 (57.35)
21	42	71973-7821	71973-7921	71973-8021	2.000 (50.80)	2.095 (53.21)	2.358 (59.89)
22	44	71973-7822	71973-7922	71973-8022	2.100 (53.34)	2.195 (55.75)	2.458 (62.43)
23	46	71973-7823	71973-7923	71973-8023	2.200 (55.88)	2.295 (58.29)	2.558 (64.97)
24	48	71973-7824	71973-7924	71973-8024	2.300 (58.42)	2.395 (60.83)	2.658 (67.51)
25	50	71973-7825	71973-7925	71973-8025	2.400 (60.96)	2.495 (63.37)	2.758 (70.05)
26	52	71973-7826	71973-7926	71973-8026	2.500 (63.50)	2.595 (65.91)	2.858 (72.59)
27	54	71973-7827	71973-7927	71973-8027	2.600 (66.04)	2.695 (68.45)	2.958 (75.13)
28	56	71973-7828	71973-7928	71973-8028	2.700 (68.58)	2.795 (70.99)	3.058 (77.67)
29	58	71973-7829	71973-7929	71973-8029	2.800 (71.12)	2.895 (73.53)	3.158 (80.21)
30	60	71973-7830	71973-7930	71973-8030	2.900 (73.66)	2.995 (76.07)	3.258 (82.75)
31	62	71973-7831	71973-7931	71973-8031	3.000 (76.20)	3.095 (78.61)	3.358 (85.29)
32	64	71973-7832	71973-7932	71973-8032	3.100 (78.74)	3.195 (81.15)	3.458 (87.83)

NO. OF CKTS PER ROW	NO. OF CKTS TOTAL	OPTION D ASSEMBLY PACKAGED IN TRAYS PER PK-70873-0239 (SEE SHEET 1 FOR FINISH SPECIFICATIONS) 15 GOLD	30 GOLD	50 GOLD	DIMENSION A	DIMENSION B	DIMENSION D
33	66	71973-7833	71973-7933	71973-8033	3.200 (81.28)	3.295 (83.69)	3.558 (90.37)
34	68	71973-7834	71973-7934	71973-8034	3.300 (83.82)	3.395 (86.23)	3.658 (92.91)
35	70	71973-7835	71973-7935	71973-8035	3.400 (86.36)	3.495 (88.77)	3.758 (95.45)
36	72	71973-7836	71973-7936	71973-8036	3.500 (88.90)	3.595 (91.31)	3.858 (97.99)

REV	DESCRIPTION
K	ADD OPTION K & L EC NO: S2010-0534 DRWN:SKANG 2009/12/30 CH'KD:ATSEE 2010/01/08 APPR:MLONG 2010/01/14

QUALITY SYMBOLS
FA=0
FC=0
FB=0

GENERAL TOLERANCES (UNLESS SPECIFIED)

	mm	INCH
4 PLACES	± ---	± ---
3 PLACES	± ---	± .010
2 PLACES	± 0.25	± ---
1 PLACE	± ---	± ---
ANGULAR ±1/2°		

DRAFT WHERE APPLICABLE MUST REMAIN WITHIN DIMENSIONS

DIMENSION STYLE: IN/MM
SCALE: NTS
DESIGN UNITS: INCH
THIRD ANGLE PROJECTION

DRAWN BY	DJB	DATE 1991/10/21
CHECKED BY	DJB	DATE 1991/10/21
APPROVED BY	MLONG	DATE 2010/01/14

TITLE: EARLY ENTRY R/A RECPT .120"PC TAIL W/O LOWER ROW PINSTOP-.100" GRID

molex MOLEX INCORPORATED

MATERIAL NO.: SEE TABLE

DOCUMENT NO.: SDA-71973-****

SHEET NO.: 15 OF 26

SIZE: A3

THIS DRAWING CONTAINS INFORMATION THAT IS PROPRIETARY TO MOLEX INCORPORATED AND SHOULD NOT BE USED WITHOUT WRITTEN PERMISSION

NO. OF CKTS PER ROW	NO. OF CKTS TOTAL	OPTION E ASSEMBLY PACKAGED IN TUBES PER PK-70873-0138 (SEE SHEET 1 FOR FINISH SPECIFICATIONS) 15 GOLD	30 GOLD	50 GOLD	DIMENSION A	DIMENSION B
4	8	71973-3404	71973-3504	71973-3604	.300 (7.62)	.395 (10.03)
5	10	71973-3405	71973-3505	71973-3605	.400 (10.16)	.495 (12.57)
6	12	71973-3406	71973-3506	71973-3606	.500 (12.70)	.595 (15.11)
7	14	71973-3407	71973-3507	71973-3607	.600 (15.24)	.695 (17.65)
8	16	71973-3408	71973-3508	71973-3608	.700 (17.78)	.795 (20.19)
9	18	71973-3409	71973-3509	71973-3609	.800 (20.32)	.895 (22.73)
10	20	71973-3410	71973-3510	71973-3610	.900 (22.86)	.995 (25.27)
11	22	71973-3411	71973-3511	71973-3611	1.000 (25.40)	1.095 (27.81)
12	24	71973-3412	71973-3512	71973-3612	1.100 (27.94)	1.195 (30.35)
13	26	71973-3413	71973-3513	71973-3613	1.200 (30.48)	1.295 (32.89)
14	28	71973-3414	71973-3514	71973-3614	1.300 (33.02)	1.395 (35.43)
15	30	71973-3415	71973-3515	71973-3615	1.400 (35.56)	1.495 (37.97)
16	32	71973-3416	71973-3516	71973-3616	1.500 (38.10)	1.595 (40.51)
17	34	71973-3417	71973-3517	71973-3617	1.600 (40.64)	1.695 (43.05)
18	36	71973-3418	71973-3518	71973-3618	1.700 (43.18)	1.795 (45.59)
19	38	71973-3419	71973-3519	71973-3619	1.800 (45.72)	1.895 (48.13)
20	40	71973-3420	71973-3520	71973-3620	1.900 (48.26)	1.995 (50.67)
21	42	71973-3421	71973-3521	71973-3621	2.000 (50.80)	2.095 (53.21)
22	44	71973-3422	71973-3522	71973-3622	2.100 (53.34)	2.195 (55.75)
23	46	71973-3423	71973-3523	71973-3623	2.200 (55.88)	2.295 (58.29)
24	48	71973-3424	71973-3524	71973-3624	2.300 (58.42)	2.395 (60.83)
25	50	71973-3425	71973-3525	71973-3625	2.400 (60.96)	2.495 (63.37)
26	52	71973-3426	71973-3526	71973-3626	2.500 (63.50)	2.595 (65.91)
27	54	71973-3427	71973-3527	71973-3627	2.600 (66.04)	2.695 (68.45)
28	56	71973-3428	71973-3528	71973-3628	2.700 (68.58)	2.795 (70.99)
29	58	71973-3429	71973-3529	71973-3629	2.800 (71.12)	2.895 (73.53)
30	60	71973-3430	71973-3530	71973-3630	2.900 (73.66)	2.995 (76.07)
31	62	71973-3431	71973-3531	71973-3631	3.000 (76.20)	3.095 (78.61)
32	64	71973-3432	71973-3532	71973-3632	3.100 (78.74)	3.195 (81.15)
33	66	71973-3433	71973-3533	71973-3633	3.200 (81.28)	3.295 (83.69)

NO. OF CKTS PER ROW	NO. OF CKTS TOTAL	OPTION E ASSEMBLY PACKAGED IN TUBES PER PK-70873-0138 (SEE SHEET 1 FOR FINISH SPECIFICATIONS) 15 GOLD	30 GOLD	50 GOLD	DIMENSION A	DIMENSION B
34	68	71973-3434	71973-3534	71973-3634	3.300 (83.82)	3.395 (86.23)
35	70	71973-3435	71973-3535	71973-3635	3.400 (86.36)	3.495 (88.77)
36	72	71973-3436	71973-3536	71973-3636	3.500 (88.90)	3.595 (91.31)

"X" INDICATES TOOLING IS NOT AVAILABLE

REV	DESCRIPTION	EC NO: S2010-0534	DRWN:SKANG	CH'KD:ATSEE	APPR:MLONG
K	ADD OPTION K & L		2009/12/30	2010/01/08	2010/01/14

QUALITY SYMBOLS
FA=0
FC=0
FP=0

GENERAL TOLERANCES (UNLESS SPECIFIED)

	mm	INCH
4 PLACES	± ---	± ---
3 PLACES	± ---	± .010
2 PLACES	± 0.25	± ---
1 PLACE	± ---	± ---
ANGULAR ±1/2°		

DRAFT WHERE APPLICABLE MUST REMAIN WITHIN DIMENSIONS

DIMENSION STYLE: IN/MM
SCALE: NTS
DESIGN UNITS: INCH
THIRD ANGLE PROJECTION

DRAWN BY: DJB DATE: 1991/10/21
CHECKED BY: DJB DATE: 1991/10/21
APPROVED BY: MLONG DATE: 2010/01/14

TITLE: EARLY ENTRY R/A RECPT .120"PC TAIL W/O LOWER ROW PINSTOP-.100" GRID

MOLEX INCORPORATED

MATERIAL NO.: SEE TABLE
DOCUMENT NO.: SDA-71973-****
SHEET NO.: 16 OF 26
SIZE: A3

THIS DRAWING CONTAINS INFORMATION THAT IS PROPRIETARY TO MOLEX INCORPORATED AND SHOULD NOT BE USED WITHOUT WRITTEN PERMISSION

NO. OF CKTS PER ROW	NO. OF CKTS TOTAL	OPTION F ASSEMBLY PACKAGED IN TUBES PER PK-70873-0139 (SEE SHEET 1 FOR FINISH SPECIFICATIONS) 15 GOLD	30 GOLD	50 GOLD	DIMENSION A	DIMENSION B	DIMENSION D
4	8	71973-4204	71973-4304	71973-4404	.300 (7.62)	.395 (10.03)	.658 (16.71)
5	10	71973-4205	71973-4305	71973-4405	.400 (10.16)	.495 (12.57)	.758 (19.25)
6	12	71973-4206	71973-4306	71973-4406	.500 (12.70)	.595 (15.11)	.858 (21.79)
7	14	71973-4207	71973-4307	71973-4407	.600 (15.24)	.695 (17.65)	.958 (24.33)
8	16	71973-4208	71973-4308	71973-4408	.700 (17.78)	.795 (20.19)	1.058 (26.87)
9	18	71973-4209	71973-4309	71973-4409	.800 (20.32)	.895 (22.73)	1.158 (29.41)
10	20	71973-4210	71973-4310	71973-4410	.900 (22.86)	.995 (25.27)	1.258 (31.95)
11	22	71973-4211	71973-4311	71973-4411	1.000 (25.40)	1.095 (27.81)	1.358 (34.49)
12	24	71973-4212	71973-4312	71973-4412	1.100 (27.94)	1.195 (30.35)	1.458 (37.03)
13	26	71973-4213	71973-4313	71973-4413	1.200 (30.48)	1.295 (32.89)	1.558 (39.57)
14	28	71973-4214	71973-4314	71973-4414	1.300 (33.02)	1.395 (35.43)	1.658 (42.11)
15	30	71973-4215	71973-4315	71973-4415	1.400 (35.56)	1.495 (37.97)	1.758 (44.65)
16	32	71973-4216	71973-4316	71973-4416	1.500 (38.10)	1.595 (40.51)	1.858 (47.19)
17	34	71973-4217	71973-4317	71973-4417	1.600 (40.64)	1.695 (43.05)	1.958 (49.73)
18	36	71973-4218	71973-4318	71973-4418	1.700 (43.18)	1.795 (45.59)	2.058 (52.27)
19	38	71973-4219	71973-4319	71973-4419	1.800 (45.72)	1.895 (48.13)	2.158 (54.81)
20	40	71973-4220	71973-4320	71973-4420	1.900 (48.26)	1.995 (50.67)	2.258 (57.35)
21	42	71973-4221	71973-4321	71973-4421	2.000 (50.80)	2.095 (53.21)	2.358 (59.89)
22	44	71973-4222	71973-4322	71973-4422	2.100 (53.34)	2.195 (55.75)	2.458 (62.43)
23	46	71973-4223	71973-4323	71973-4423	2.200 (55.88)	2.295 (58.29)	2.558 (64.97)
24	48	71973-4224	71973-4324	71973-4424	2.300 (58.42)	2.395 (60.83)	2.658 (67.51)
25	50	71973-4225	71973-4325	71973-4425	2.400 (60.96)	2.495 (63.37)	2.758 (70.05)
26	52	71973-4226	71973-4326	71973-4426	2.500 (63.50)	2.595 (65.91)	2.858 (72.59)
27	54	71973-4227	71973-4327	71973-4427	2.600 (66.04)	2.695 (68.45)	2.958 (75.13)
28	56	71973-4228	71973-4328	71973-4428	2.700 (68.58)	2.795 (70.99)	3.058 (77.67)
29	58	71973-4229	71973-4329	71973-4429	2.800 (71.12)	2.895 (73.53)	3.158 (80.21)
30	60	71973-4230	71973-4330	71973-4430	2.900 (73.66)	2.995 (76.07)	3.258 (82.75)
31	62	71973-4231	71973-4331	71973-4431	3.000 (76.20)	3.095 (78.61)	3.358 (85.29)
32	64	71973-4232	71973-4332	71973-4432	3.100 (78.74)	3.195 (81.15)	3.458 (87.83)
33	66	71973-4233	71973-4333	71973-4433	3.200 (81.28)	3.295 (83.69)	3.558 (90.37)

NO. OF CKTS PER ROW	NO. OF CKTS TOTAL	OPTION F ASSEMBLY PACKAGED IN TUBES PER PK-70873-0139 (SEE SHEET 1 FOR FINISH SPECIFICATIONS) 15 GOLD	30 GOLD	50 GOLD	DIMENSION A	DIMENSION B	DIMENSION D
34	68	71973-4234	71973-4334	71973-4434	3.300 (83.82)	3.395 (86.23)	3.658 (92.91)
35	70	71973-4235	71973-4335	71973-4435	3.400 (86.36)	3.495 (88.77)	3.758 (95.45)
36	72	71973-4236	71973-4336	71973-4436	3.500 (88.90)	3.595 (91.31)	3.858 (97.99)

"X" INDICATES TOOLING IS NOT AVAILABLE.

ADD OPTION K & L
EC NO: S2010-0534 2009/12/30
DRWN:SKANG 2010/01/08
CH'KD:ATSEE 2010/01/14
APPR:MLONG
DESCRIPTION
K
REV

QUALITY SYMBOLS
FA=0
FC=0
FP=0

GENERAL TOLERANCES (UNLESS SPECIFIED)

	mm	INCH
4 PLACES	± ---	± ---
3 PLACES	± ---	± .010
2 PLACES	± 0.25	± ---
1 PLACE	± ---	± ---
ANGULAR ±1/2°		

DRAFT WHERE APPLICABLE MUST REMAIN WITHIN DIMENSIONS

DIMENSION STYLE: IN/MM
SCALE: NTS
DESIGN UNITS: INCH
THIRD ANGLE PROJECTION

DRAWN BY: DJB DATE: 1991/10/21
CHECKED BY: DJB DATE: 1991/10/21
APPROVED BY: MLONG DATE: 2010/01/14

TITLE: EARLY ENTRY R/A RECPT .120"PC TAIL W/O LOWER ROW PINSTOP-.100" GRID

MOLEX INCORPORATED

MATERIAL NO.: SEE TABLE
DOCUMENT NO.: SDA-71973-****
SHEET NO.: 17 OF 26
SIZE: A3

THIS DRAWING CONTAINS INFORMATION THAT IS PROPRIETARY TO MOLEX INCORPORATED AND SHOULD NOT BE USED WITHOUT WRITTEN PERMISSION

NO. OF CKTS PER ROW	NO. OF CKTS TOTAL	OPTION E ASSEMBLY PACKAGED IN TRAYS PER PK-70873-0239 (SEE SHEET 1 FOR FINISH SPECIFICATIONS) 15 GOLD	30 GOLD	50 GOLD	DIMENSION A	DIMENSION B
4	8	71973-8204	71973-8304	71973-8404	.300 (7.62)	.395 (10.03)
5	10	71973-8205	71973-8305	71973-8405	.400 (10.16)	.495 (12.57)
6	12	71973-8206	71973-8306	71973-8406	.500 (12.70)	.595 (15.11)
7	14	71973-8207	71973-8307	71973-8407	.600 (15.24)	.695 (17.65)
8	16	71973-8208	71973-8308	71973-8408	.700 (17.78)	.795 (20.19)
9	18	71973-8209	71973-8309	71973-8409	.800 (20.32)	.895 (22.73)
10	20	71973-8210	71973-8310	71973-8410	.900 (22.86)	.995 (25.27)
11	22	71973-8211	71973-8311	71973-8411	1.000 (25.40)	1.095 (27.81)
12	24	71973-8212	71973-8312	71973-8412	1.100 (27.94)	1.195 (30.35)
13	26	71973-8213	71973-8313	71973-8413	1.200 (30.48)	1.295 (32.89)
14	28	71973-8214	71973-8314	71973-8414	1.300 (33.02)	1.395 (35.43)
15	30	71973-8215	71973-8315	71973-8415	1.400 (35.56)	1.495 (37.97)
16	32	71973-8216	71973-8316	71973-8416	1.500 (38.10)	1.595 (40.51)
17	34	71973-8217	71973-8317	71973-8417	1.600 (40.64)	1.695 (43.05)
18	36	71973-8218	71973-8318	71973-8418	1.700 (43.18)	1.795 (45.59)
19	38	71973-8219	71973-8319	71973-8419	1.800 (45.72)	1.895 (48.13)
20	40	71973-8220	71973-8320	71973-8420	1.900 (48.26)	1.995 (50.67)
21	42	71973-8221	71973-8321	71973-8421	2.000 (50.80)	2.095 (53.21)
22	44	71973-8222	71973-8322	71973-8422	2.100 (53.34)	2.195 (55.75)
23	46	71973-8223	71973-8323	71973-8423	2.200 (55.88)	2.295 (58.29)
24	48	71973-8224	71973-8324	71973-8424	2.300 (58.42)	2.395 (60.83)
25	50	71973-8225	71973-8325	71973-8425	2.400 (60.96)	2.495 (63.37)
26	52	71973-8226	71973-8326	71973-8426	2.500 (63.50)	2.595 (65.91)
27	54	71973-8227	71973-8327	71973-8427	2.600 (66.04)	2.695 (68.45)
28	56	71973-8228	71973-8328	71973-8428	2.700 (68.58)	2.795 (70.99)
29	58	71973-8229	71973-8329	71973-8429	2.800 (71.12)	2.895 (73.53)
30	60	71973-8230	71973-8330	71973-8430	2.900 (73.66)	2.995 (76.07)
31	62	71973-8231	71973-8331	71973-8431	3.000 (76.20)	3.095 (78.61)
32	64	71973-8232	71973-8332	71973-8432	3.100 (78.74)	3.195 (81.15)
33	66	71973-8233	71973-8333	71973-8433	3.200 (81.28)	3.295 (83.69)

NO. OF CKTS PER ROW	NO. OF CKTS TOTAL	OPTION E ASSEMBLY PACKAGED IN TRAYS PER PK-70873-0239 (SEE SHEET 1 FOR FINISH SPECIFICATIONS) 15 GOLD	30 GOLD	50 GOLD	DIMENSION A	DIMENSION B
34	68	71973-8234	71973-8334	71973-8434	3.300 (83.82)	3.395 (86.23)
35	70	71973-8235	71973-8335	71973-8435	3.400 (86.36)	3.495 (88.77)
36	72	71973-8236	71973-8336	71973-8436	3.500 (88.90)	3.595 (91.31)

"X" INDICATES TOOLING IS NOT AVAILABLE.

REV	DESCRIPTION	DRWN	CHKD	APPR	DATE
K	ADD OPTION K & L EC NO: S2010-0534	SKANG	ATSEE	MLONG	2009/12/30 2010/01/08 2010/01/14

QUALITY SYMBOLS: F_A=0, F_C=0, F_P=0

GENERAL TOLERANCES (UNLESS SPECIFIED)

	mm	INCH
4 PLACES	± ---	± ---
3 PLACES	± ---	± .010
2 PLACES	± 0.25	± ---
1 PLACE	± ---	± ---
ANGULAR ±1/2°		

DRAFT WHERE APPLICABLE MUST REMAIN WITHIN DIMENSIONS

DIMENSION STYLE: IN/MM

SCALE: NTS

DESIGN UNITS: INCH

THIRD ANGLE PROJECTION

		DATE
DRAWN BY	DJB	1991/10/21
CHECKED BY	DJB	1991/10/21
APPROVED BY	MLONG	2010/01/14

TITLE: EARLY ENTRY R/A RECPT .120"PC TAIL W/O LOWER ROW PINSTOP-.100" GRID

MOLEX INCORPORATED

MATERIAL NO.: SEE TABLE

DOCUMENT NO.: SDA-71973-****

SHEET NO.: 18 OF 26

SIZE: A3

THIS DRAWING CONTAINS INFORMATION THAT IS PROPRIETARY TO MOLEX INCORPORATED AND SHOULD NOT BE USED WITHOUT WRITTEN PERMISSION

NO. OF CKTS PER ROW	NO. OF CKTS TOTAL	OPTION F ASSEMBLY PACKAGED IN TRAYS PER PK-70873-0239 (SEE SHEET 1 FOR FINISH SPECIFICATIONS) 15 GOLD	30 GOLD	50 GOLD	DIMENSION A	DIMENSION B	DIMENSION D
4	8	71973-8604	71973-8704	71973-8804	.300 (7.62)	.395 (10.03)	.658 (16.71)
5	10	71973-8605	71973-8705	71973-8805	.400 (10.16)	.495 (12.57)	.758 (19.25)
6	12	71973-8606	71973-8706	71973-8806	.500 (12.70)	.595 (15.11)	.858 (21.79)
7	14	71973-8607	71973-8707	71973-8807	.600 (15.24)	.695 (17.65)	.958 (24.33)
8	16	71973-8608	71973-8708	71973-8808	.700 (17.78)	.795 (20.19)	1.058 (26.87)
9	18	71973-8609	71973-8709	71973-8809	.800 (20.32)	.895 (22.73)	1.158 (29.41)
10	20	71973-8610	71973-8710	71973-8810	.900 (22.86)	.995 (25.27)	1.258 (31.95)
11	22	71973-8611	71973-8711	71973-8811	1.000 (25.40)	1.095 (27.81)	1.358 (34.49)
12	24	71973-8612	71973-8712	71973-8812	1.100 (27.94)	1.195 (30.35)	1.458 (37.03)
13	26	71973-8613	71973-8713	71973-8813	1.200 (30.48)	1.295 (32.89)	1.558 (39.57)
14	28	71973-8614	71973-8714	71973-8814	1.300 (33.02)	1.395 (35.43)	1.658 (42.11)
15	30	71973-8615	71973-8715	71973-8815	1.400 (35.56)	1.495 (37.97)	1.758 (44.65)
16	32	71973-8616	71973-8716	71973-8816	1.500 (38.10)	1.595 (40.51)	1.858 (47.19)
17	34	71973-8617	71973-8717	71973-8817	1.600 (40.64)	1.695 (43.05)	1.958 (49.73)
18	36	71973-8618	71973-8718	71973-8818	1.700 (43.18)	1.795 (45.59)	2.058 (52.27)
19	38	71973-8619	71973-8719	71973-8819	1.800 (45.72)	1.895 (48.13)	2.158 (54.81)
20	40	71973-8620	71973-8720	71973-8820	1.900 (48.26)	1.995 (50.67)	2.258 (57.35)
21	42	71973-8621	71973-8721	71973-8821	2.000 (50.80)	2.095 (53.21)	2.358 (59.89)
22	44	71973-8622	71973-8722	71973-8822	2.100 (53.34)	2.195 (55.75)	2.458 (62.43)
23	46	71973-8623	71973-8723	71973-8823	2.200 (55.88)	2.295 (58.29)	2.558 (64.97)
24	48	71973-8624	71973-8724	71973-8824	2.300 (58.42)	2.395 (60.83)	2.658 (67.51)
25	50	71973-8625	71973-8725	71973-8825	2.400 (60.96)	2.495 (63.37)	2.758 (70.05)
26	52	71973-8626	71973-8726	71973-8826	2.500 (63.50)	2.595 (65.91)	2.858 (72.59)
27	54	71973-8627	71973-8727	71973-8827	2.600 (66.04)	2.695 (68.45)	2.958 (75.13)
28	56	71973-8628	71973-8728	71973-8828	2.700 (68.58)	2.795 (70.99)	3.058 (77.67)
29	58	71973-8629	71973-8729	71973-8829	2.800 (71.12)	2.895 (73.53)	3.158 (80.21)
30	60	71973-8630	71973-8730	71973-8830	2.900 (73.66)	2.995 (76.07)	3.258 (82.75)
31	62	71973-8631	71973-8731	71973-8831	3.000 (76.20)	3.095 (78.61)	3.358 (85.29)
32	64	71973-8632	71973-8732	71973-8832	3.100 (78.74)	3.195 (81.15)	3.458 (87.83)
33	66	71973-8633	71973-8733	71973-8833	3.200 (81.28)	3.295 (83.69)	3.558 (90.37)

NO. OF CKTS PER ROW	NO. OF CKTS TOTAL	OPTION F ASSEMBLY PACKAGED IN TRAYS PER PK-70873-0239 (SEE SHEET 1 FOR FINISH SPECIFICATIONS) 15 GOLD	30 GOLD	50 GOLD	DIMENSION A	DIMENSION B	DIMENSION D
34	68	71973-8634	71973-8734	71973-8834	3.300 (83.82)	3.395 (86.23)	3.658 (92.91)
35	70	71973-8635	71973-8735	71973-8835	3.400 (86.36)	3.495 (88.77)	3.758 (95.45)
36	72	71973-8636	71973-8736	71973-8836	3.500 (88.90)	3.595 (91.31)	3.858 (97.99)

"X" INDICATES TOOLING IS NOT AVAILABLE.

ADD OPTION K & L
EC NO: S2010-0534
DRWN:SKANG 2009/12/30
CH'KD:ATSEE 2010/01/08
APPR:MLONG 2010/01/14
DESCRIPTION
K
REV

QUALITY SYMBOLS
FA=0
FC=0
FP=0

GENERAL TOLERANCES (UNLESS SPECIFIED)

	mm	INCH
4 PLACES	± ---	± ---
3 PLACES	± ---	± .010
2 PLACES	± 0.25	± ---
1 PLACE	± ---	± ---
ANGULAR ±1/2°		

DRAFT WHERE APPLICABLE MUST REMAIN WITHIN DIMENSIONS

DIMENSION STYLE: IN/MM
SCALE: NTS
DESIGN UNITS: INCH
THIRD ANGLE PROJECTION

DRAWN BY: DJB DATE: 1991/10/21
CHECKED BY: DJB DATE: 1991/10/21
APPROVED BY: MLONG DATE: 2010/01/14

TITLE: EARLY ENTRY R/A RECPT .120"PC TAIL W/O LOWER ROW PINSTOP-.100" GRID

MOLEX INCORPORATED

MATERIAL NO.: SEE TABLE
DOCUMENT NO.: SDA-71973-****
SHEET NO.: 19 OF 26
SIZE: A3

THIS DRAWING CONTAINS INFORMATION THAT IS PROPRIETARY TO MOLEX INCORPORATED AND SHOULD NOT BE USED WITHOUT WRITTEN PERMISSION

NO. OF CKTS PER ROW	NO. OF CKTS TOTAL		OPTION G ASSEMBLY PACKAGED IN TUBES PER PK-70873-0138 (SEE SHEET 1 FOR FINISH SPECIFICATIONS) 15 GOLD		30 GOLD		50 GOLD	DIMENSION A	DIMENSION B		
4	8			X	71973-5004	X	71973-5104	X	71973-5204	.300 (7.62)	.395 (10.03)
5	10			X	71973-5005	X	71973-5105	X	71973-5205	.400 (10.16)	.495 (12.57)
6	12			X	71973-5006	X	71973-5106	X	71973-5206	.500 (12.70)	.595 (15.11)
7	14			X	71973-5007	X	71973-5107	X	71973-5207	.600 (15.24)	.695 (17.65)
8	16			X	71973-5008	X	71973-5108	X	71973-5208	.700 (17.78)	.795 (20.19)
9	18			X	71973-5009	X	71973-5109	X	71973-5209	.800 (20.32)	.895 (22.73)
10	20			X	71973-5010	X	71973-5110	X	71973-5210	.900 (22.86)	.995 (25.27)
11	22			X	71973-5011	X	71973-5111	X	71973-5211	1.000 (25.40)	1.095 (27.81)
12	24			X	71973-5012	X	71973-5112	X	71973-5212	1.100 (27.94)	1.195 (30.35)
13	26			X	71973-5013	X	71973-5113	X	71973-5213	1.200 (30.48)	1.295 (32.89)
14	28			X	71973-5014	X	71973-5114	X	71973-5214	1.300 (33.02)	1.395 (35.43)
15	30			X	71973-5015	X	71973-5115	X	71973-5215	1.400 (35.56)	1.495 (37.97)
16	32			X	71973-5016	X	71973-5116	X	71973-5216	1.500 (38.10)	1.595 (40.51)
17	34			X	71973-5017	X	71973-5117	X	71973-5217	1.600 (40.64)	1.695 (43.05)
18	36			X	71973-5018	X	71973-5118	X	71973-5218	1.700 (43.18)	1.795 (45.59)
19	38			X	71973-5019	X	71973-5119	X	71973-5219	1.800 (45.72)	1.895 (48.13)
20	40			X	71973-5020	X	71973-5120	X	71973-5220	1.900 (48.26)	1.995 (50.67)
21	42			X	71973-5021	X	71973-5121	X	71973-5221	2.000 (50.80)	2.095 (53.21)
22	44			X	71973-5022	X	71973-5122	X	71973-5222	2.100 (53.34)	2.195 (55.75)
23	46			X	71973-5023	X	71973-5123	X	71973-5223	2.200 (55.88)	2.295 (58.29)
24	48			X	71973-5024	X	71973-5124	X	71973-5224	2.300 (58.42)	2.395 (60.83)
25	50			X	71973-5025	X	71973-5125	X	71973-5225	2.400 (60.96)	2.495 (63.37)
26	52			X	71973-5026	X	71973-5126	X	71973-5226	2.500 (63.50)	2.595 (65.91)
27	54			X	71973-5027	X	71973-5127	X	71973-5227	2.600 (66.04)	2.695 (68.45)
28	56			X	71973-5028	X	71973-5128	X	71973-5228	2.700 (68.58)	2.795 (70.99)
29	58			X	71973-5029	X	71973-5129	X	71973-5229	2.800 (71.12)	2.895 (73.53)
30	60			X	71973-5030	X	71973-5130	X	71973-5230	2.900 (73.66)	2.995 (76.07)
31	62			X	71973-5031	X	71973-5131	X	71973-5231	3.000 (76.20)	3.095 (78.61)

NO. OF CKTS PER ROW	NO. OF CKTS TOTAL		OPTION G ASSEMBLY PACKAGED IN TUBES PER PK-70873-0138 (SEE SHEET 1 FOR FINISH SPECIFICATIONS) 15 GOLD		30 GOLD		50 GOLD	DIMENSION A	DIMENSION B		
32	64			X	71973-5032	X	71973-5132	X	71973-5232	3.100 (78.74)	3.195 (81.15)
33	66			X	71973-5033	X	71973-5133	X	71973-5233	3.200 (81.28)	3.295 (83.69)
34	68			X	71973-5034	X	71973-5134	X	71973-5234	3.300 (83.82)	3.395 (86.23)
35	70			X	71973-5035	X	71973-5135	X	71973-5235	3.400 (86.36)	3.495 (88.77)
36	72			X	71973-5036	X	71973-5136	X	71973-5236	3.500 (88.90)	3.595 (91.31)

"X" INDICATES TOOLING IS NOT AVAILABLE.

ADD OPTION K & L
EC NO: S2010-0534 2009/12/30
DRWN:SKANG 2010/01/08
CH'KD:ATSEE 2010/01/14
APPR:MLONG
DESCRIPTION
K
REV

QUALITY SYMBOLS
F_A=0
F_C=0
F_P=0

GENERAL TOLERANCES (UNLESS SPECIFIED)

	mm	INCH
4 PLACES	± ---	± ---
3 PLACES	± ---	± .010
2 PLACES	± 0.25	± ---
1 PLACE	± ---	± ---
ANGULAR ±1/2°		

DRAFT WHERE APPLICABLE MUST REMAIN WITHIN DIMENSIONS

DIMENSION STYLE: IN/MM
SCALE: NTS
DESIGN UNITS: INCH
THIRD ANGLE PROJECTION

DRAWN BY: DJB DATE: 1991/10/21
CHECKED BY: DJB DATE: 1991/10/21
APPROVED BY: MLONG DATE: 2010/01/14

TITLE: EARLY ENTRY R/A RECPT .120"PC TAIL W/O LOWER ROW PINSTOP-.100" GRID

molex MOLEX INCORPORATED

MATERIAL NO.: SEE TABLE
DOCUMENT NO.: SDA-71973-****
SHEET NO.: 20 OF 26
SIZE: A3

THIS DRAWING CONTAINS INFORMATION THAT IS PROPRIETARY TO MOLEX INCORPORATED AND SHOULD NOT BE USED WITHOUT WRITTEN PERMISSION

NO. OF CKTS PER ROW	NO. OF CKTS TOTAL		OPTION H ASSEMBLY PACKAGED IN TUBES PER PK-70873-0139 (SEE SHEET 1 FOR FINISH SPECIFICATIONS) 15 GOLD		30 GOLD		50 GOLD	DIMENSION A	DIMENSION B		DIMENSION D
4	8		X 71973-5804	X	71973-5904	X	71973-6004	.300 (7.62)	.395 (10.03)		.658 (16.71)
5	10		X 71973-5805	X	71973-5905	X	71973-6005	.400 (10.16)	.495 (12.57)		.758 (19.25)
6	12		X 71973-5806	X	71973-5906	X	71973-6006	.500 (12.70)	.595 (15.11)		.858 (21.79)
7	14		X 71973-5807	X	71973-5907	X	71973-6007	.600 (15.24)	.695 (17.65)		.958 (24.33)
8	16		X 71973-5808	X	71973-5908	X	71973-6008	.700 (17.78)	.795 (20.19)		1.058 (26.87)
9	18		X 71973-5809	X	71973-5909	X	71973-6009	.800 (20.32)	.895 (22.73)		1.158 (29.41)
10	20		X 71973-5810	X	71973-5910	X	71973-6010	.900 (22.86)	.995 (25.27)		1.258 (31.95)
11	22		X 71973-5811	X	71973-5911	X	71973-6011	1.000 (25.40)	1.095 (27.81)		1.358 (34.49)
12	24		X 71973-5812	X	71973-5912	X	71973-6012	1.100 (27.94)	1.195 (30.35)		1.458 (37.03)
13	26		X 71973-5813	X	71973-5913	X	71973-6013	1.200 (30.48)	1.295 (32.89)		1.558 (39.57)
14	28		X 71973-5814	X	71973-5914	X	71973-6014	1.300 (33.02)	1.395 (35.43)		1.658 (42.11)
15	30		X 71973-5815	X	71973-5915	X	71973-6015	1.400 (35.56)	1.495 (37.97)		1.758 (44.65)
16	32		X 71973-5816	X	71973-5916	X	71973-6016	1.500 (38.10)	1.595 (40.51)		1.858 (47.19)
17	34		X 71973-5817	X	71973-5917	X	71973-6017	1.600 (40.64)	1.695 (43.05)		1.958 (49.73)
18	36		X 71973-5818	X	71973-5918	X	71973-6018	1.700 (43.18)	1.795 (45.59)		2.058 (52.27)
19	38		X 71973-5819	X	71973-5919	X	71973-6019	1.800 (45.72)	1.895 (48.13)		2.158 (54.81)
20	40		X 71973-5820	X	71973-5920	X	71973-6020	1.900 (48.26)	1.995 (50.67)		2.258 (57.35)
21	42		X 71973-5821	X	71973-5921	X	71973-6021	2.000 (50.80)	2.095 (53.21)		2.358 (59.89)
22	44		X 71973-5822	X	71973-5922	X	71973-6022	2.100 (53.34)	2.195 (55.75)		2.458 (62.43)
23	46		X 71973-5823	X	71973-5923	X	71973-6023	2.200 (55.88)	2.295 (58.29)		2.558 (64.97)
24	48		X 71973-5824	X	71973-5924	X	71973-6024	2.300 (58.42)	2.395 (60.83)		2.658 (67.51)
25	50		X 71973-5825	X	71973-5925	X	71973-6025	2.400 (60.96)	2.495 (63.37)		2.758 (70.05)
26	52		X 71973-5826	X	71973-5926	X	71973-6026	2.500 (63.50)	2.595 (65.91)		2.858 (72.59)
27	54		X 71973-5827	X	71973-5927	X	71973-6027	2.600 (66.04)	2.695 (68.45)		2.958 (75.13)
28	56		X 71973-5828	X	71973-5928	X	71973-6028	2.700 (68.58)	2.795 (70.99)		3.058 (77.67)
29	58		X 71973-5829	X	71973-5929	X	71973-6029	2.800 (71.12)	2.895 (73.53)		3.158 (80.21)
30	60		X 71973-5830	X	71973-5930	X	71973-6030	2.900 (73.66)	2.995 (76.07)		3.258 (82.75)

NO. OF CKTS PER ROW	NO. OF CKTS TOTAL		OPTION H ASSEMBLY PACKAGED IN TUBES PER PK-70873-0139 (SEE SHEET 1 FOR FINISH SPECIFICATIONS) 15 GOLD		30 GOLD		50 GOLD	DIMENSION A	DIMENSION B		DIMENSION D
31	62		X 71973-5831	X	71973-5931	X	71973-6031	3.000 (76.20)	3.095 (78.61)		3.358 (85.29)
32	64		X 71973-5832	X	71973-5932	X	71973-6032	3.100 (78.74)	3.195 (81.15)		3.458 (87.83)
33	66		X 71973-5833	X	71973-5933	X	71973-6033	3.200 (81.28)	3.295 (83.69)		3.558 (90.37)
34	68		X 71973-5834	X	71973-5934	X	71973-6034	3.300 (83.82)	3.395 (86.23)		3.658 (92.91)
35	70		X 71973-5835	X	71973-5935	X	71973-6035	3.400 (86.36)	3.495 (88.77)		3.758 (95.45)
36	72		X 71973-5836	X	71973-5936	X	71973-6036	3.500 (88.90)	3.595 (91.31)		3.858 (97.99)

"X" INDICATES TOOLING IS NOT AVAILABLE.

ADD OPTION K & L
EC NO: S2010-0534
DRWN:SKANG 2009/12/30
CH'KD:ATSEE 2010/01/08
APPR:MLONG 2010/01/14
DESCRIPTION
K
REV

QUALITY SYMBOLS
FA=0
FC=0
FP=0

GENERAL TOLERANCES (UNLESS SPECIFIED)

	mm	INCH
4 PLACES	± ---	± ---
3 PLACES	± ---	± .010
2 PLACES	± 0.25	± ---
1 PLACE	± ---	± ---
ANGULAR ±1/2°		

DRAFT WHERE APPLICABLE MUST REMAIN WITHIN DIMENSIONS

DIMENSION STYLE: IN/MM
SCALE: NTS
DESIGN UNITS: INCH
THIRD ANGLE PROJECTION

DRAWN BY: DJB DATE: 1991/10/21
CHECKED BY: DJB DATE: 1991/10/21
APPROVED BY: MLONG DATE: 2010/01/14

TITLE: EARLY ENTRY R/A RECPT .120"PC TAIL W/O LOWER ROW PINSTOP-.100" GRID

MOLEX INCORPORATED

MATERIAL NO.: SEE TABLE
DOCUMENT NO.: SDA-71973-****
SHEET NO.: 21 OF 26
SIZE: A3

THIS DRAWING CONTAINS INFORMATION THAT IS PROPRIETARY TO MOLEX INCORPORATED AND SHOULD NOT BE USED WITHOUT WRITTEN PERMISSION

NO. OF CKTS PER ROW	NO. OF CKTS TOTAL	OPTION G ASSEMBLY PACKAGED IN TRAYS PER PK-70873-0239 (SEE SHEET 1 FOR FINISH SPECIFICATIONS) 15 GOLD	30 GOLD	50 GOLD	DIMENSION A	DIMENSION B
4	8	71973-9004	71973-9104	71973-9204	.300 (7.62)	.395 (10.03)
5	10	71973-9005	71973-9105	71973-9205	.400 (10.16)	.495 (12.57)
6	12	71973-9006	71973-9106	71973-9206	.500 (12.70)	.595 (15.11)
7	14	71973-9007	71973-9107	71973-9207	.600 (15.24)	.695 (17.65)
8	16	71973-9008	71973-9108	71973-9208	.700 (17.78)	.795 (20.19)
9	18	71973-9009	71973-9109	71973-9209	.800 (20.32)	.895 (22.73)
10	20	71973-9010	71973-9110	71973-9210	.900 (22.86)	.995 (25.27)
11	22	71973-9011	71973-9111	71973-9211	1.000 (25.40)	1.095 (27.81)
12	24	71973-9012	71973-9112	71973-9212	1.100 (27.94)	1.195 (30.35)
13	26	71973-9013	71973-9113	71973-9213	1.200 (30.48)	1.295 (32.89)
14	28	71973-9014	71973-9114	71973-9214	1.300 (33.02)	1.395 (35.43)
15	30	71973-9015	71973-9115	71973-9215	1.400 (35.56)	1.495 (37.97)
16	32	71973-9016	71973-9116	71973-9216	1.500 (38.10)	1.595 (40.51)
17	34	71973-9017	71973-9117	71973-9217	1.600 (40.64)	1.695 (43.05)
18	36	71973-9018	71973-9118	71973-9218	1.700 (43.18)	1.795 (45.59)
19	38	71973-9019	71973-9119	71973-9219	1.800 (45.72)	1.895 (48.13)
20	40	71973-9020	71973-9120	71973-9220	1.900 (48.26)	1.995 (50.67)
21	42	71973-9021	71973-9121	71973-9221	2.000 (50.80)	2.095 (53.21)
22	44	71973-9022	71973-9122	71973-9222	2.100 (53.34)	2.195 (55.75)
23	46	71973-9023	71973-9123	71973-9223	2.200 (55.88)	2.295 (58.29)
24	48	71973-9024	71973-9124	71973-9224	2.300 (58.42)	2.395 (60.83)
25	50	71973-9025	71973-9125	71973-9225	2.400 (60.96)	2.495 (63.37)
26	52	71973-9026	71973-9126	71973-9226	2.500 (63.50)	2.595 (65.91)
27	54	71973-9027	71973-9127	71973-9227	2.600 (66.04)	2.695 (68.45)
28	56	71973-9028	71973-9128	71973-9228	2.700 (68.58)	2.795 (70.99)
29	58	71973-9029	71973-9129	71973-9229	2.800 (71.12)	2.895 (73.53)
30	60	71973-9030	71973-9130	71973-9230	2.900 (73.66)	2.995 (76.07)
31	62	71973-9031	71973-9131	71973-9231	3.000 (76.20)	3.095 (78.61)
32	64	71973-9032	71973-9132	71973-9232	3.100 (78.74)	3.195 (81.15)
33	66	71973-9033	71973-9133	71973-9233	3.200 (81.28)	3.295 (83.69)

NO. OF CKTS PER ROW	NO. OF CKTS TOTAL	OPTION G ASSEMBLY PACKAGED IN TRAYS PER PK-70873-0239 (SEE SHEET 1 FOR FINISH SPECIFICATIONS) 15 GOLD	30 GOLD	50 GOLD	DIMENSION A	DIMENSION B
34	68	71973-9034	71973-9134	71973-9234	3.300 (83.82)	3.395 (86.23)
35	70	71973-9035	71973-9135	71973-9235	3.400 (86.36)	3.495 (88.77)
36	72	71973-9036	71973-9136	71973-9236	3.500 (88.90)	3.595 (91.31)

"X" INDICATES TOOLING IS NOT AVAILABLE

REV	DESCRIPTION	DRWN	CH'KD	APPR	DATE
K	ADD OPTION K & L EC NO: S2010-0534	SKANG	ATSEE	MLONG	2009/12/30 2010/01/08 2010/01/14

QUALITY SYMBOLS: FA=0, FC=0, FP=0

GENERAL TOLERANCES (UNLESS SPECIFIED)

	mm	INCH
4 PLACES	± ---	± ---
3 PLACES	± ---	± .010
2 PLACES	± 0.25	± ---
1 PLACE	± ---	± ---
ANGULAR ±1/2°		

DRAFT WHERE APPLICABLE MUST REMAIN WITHIN DIMENSIONS

DIMENSION STYLE: IN/MM

SCALE: NTS

DESIGN UNITS: INCH

THIRD ANGLE PROJECTION

DRAWN BY: DJB DATE: 1991/10/21

CHECKED BY: DJB DATE: 1991/10/21

APPROVED BY: MLONG DATE: 2010/01/14

TITLE: EARLY ENTRY R/A RECPT .120"PC TAIL W/O LOWER ROW PINSTOP-.100" GRID

MOLEX INCORPORATED

MATERIAL NO.: SEE TABLE

DOCUMENT NO.: SDA-71973-****

SHEET NO.: 22 OF 26

SIZE: A3

THIS DRAWING CONTAINS INFORMATION THAT IS PROPRIETARY TO MOLEX INCORPORATED AND SHOULD NOT BE USED WITHOUT WRITTEN PERMISSION

NO. OF CKTS PER ROW	NO. OF CKTS TOTAL		OPTION H ASSEMBLY PACKAGED IN TRAYS PER PK-70873-0239 (SEE SHEET 1 FOR FINISH SPECIFICATIONS) 15 GOLD		30 GOLD		50 GOLD		DIMENSION A	DIMENSION B		DIMENSION D
4	8		X	71973-9404	X	71973-9504	X	71973-9604	.300 (7.62)	.395 (10.03)		.658 (16.71)
5	10		X	71973-9405	X	71973-9505	X	71973-9605	.400 (10.16)	.495 (12.57)		.758 (19.25)
6	12		X	71973-9406	X	71973-9506	X	71973-9606	.500 (12.70)	.595 (15.11)		.858 (21.79)
7	14		X	71973-9407	X	71973-9507	X	71973-9607	.600 (15.24)	.695 (17.65)		.958 (24.33)
8	16		X	71973-9408	X	71973-9508	X	71973-9608	.700 (17.78)	.795 (20.19)		1.058 (26.87)
9	18		X	71973-9409	X	71973-9509	X	71973-9609	.800 (20.32)	.895 (22.73)		1.158 (29.41)
10	20		X	71973-9410	X	71973-9510	X	71973-9610	.900 (22.86)	.995 (25.27)		1.258 (31.95)
11	22		X	71973-9411	X	71973-9511	X	71973-9611	1.000 (25.40)	1.095 (27.81)		1.358 (34.49)
12	24		X	71973-9412	X	71973-9512	X	71973-9612	1.100 (27.94)	1.195 (30.35)		1.458 (37.03)
13	26		X	71973-9413	X	71973-9513	X	71973-9613	1.200 (30.48)	1.295 (32.89)		1.558 (39.57)
14	28		X	71973-9414	X	71973-9514	X	71973-9614	1.300 (33.02)	1.395 (35.43)		1.658 (42.11)
15	30		X	71973-9415	X	71973-9515	X	71973-9615	1.400 (35.56)	1.495 (37.97)		1.758 (44.65)
16	32		X	71973-9416	X	71973-9516	X	71973-9616	1.500 (38.10)	1.595 (40.51)		1.858 (47.19)
17	34		X	71973-9417	X	71973-9517	X	71973-9617	1.600 (40.64)	1.695 (43.05)		1.958 (49.73)
18	36		X	71973-9418	X	71973-9518	X	71973-9618	1.700 (43.18)	1.795 (45.59)		2.058 (52.27)
19	38		X	71973-9419	X	71973-9519	X	71973-9619	1.800 (45.72)	1.895 (48.13)		2.158 (54.81)
20	40		X	71973-9420	X	71973-9520	X	71973-9620	1.900 (48.26)	1.995 (50.67)		2.258 (57.35)
21	42		X	71973-9421	X	71973-9521	X	71973-9621	2.000 (50.80)	2.095 (53.21)		2.358 (59.89)
22	44		X	71973-9422	X	71973-9522	X	71973-9622	2.100 (53.34)	2.195 (55.75)		2.458 (62.43)
23	46		X	71973-9423	X	71973-9523	X	71973-9623	2.200 (55.88)	2.295 (58.29)		2.558 (64.97)
24	48		X	71973-9424	X	71973-9524	X	71973-9624	2.300 (58.42)	2.395 (60.83)		2.658 (67.51)
25	50		X	71973-9425	X	71973-9525	X	71973-9625	2.400 (60.96)	2.495 (63.37)		2.758 (70.05)
26	52		X	71973-9426	X	71973-9526	X	71973-9626	2.500 (63.50)	2.595 (65.91)		2.858 (72.59)
27	54		X	71973-9427	X	71973-9527	X	71973-9627	2.600 (66.04)	2.695 (68.45)		2.958 (75.13)
28	56		X	71973-9428	X	71973-9528	X	71973-9628	2.700 (68.58)	2.795 (70.99)		3.058 (77.67)
29	58		X	71973-9429	X	71973-9529	X	71973-9629	2.800 (71.12)	2.895 (73.53)		3.158 (80.21)
30	60		X	71973-9430	X	71973-9530	X	71973-9630	2.900 (73.66)	2.995 (76.07)		3.258 (82.75)
31	62		X	71973-9431	X	71973-9531	X	71973-9631	3.000 (76.20)	3.095 (78.61)		3.358 (85.29)
32	64		X	71973-9432	X	71973-9532	X	71973-9632	3.100 (78.74)	3.195 (81.15)		3.458 (87.83)

NO. OF CKTS PER ROW	NO. OF CKTS TOTAL		OPTION H ASSEMBLY PACKAGED IN TRAYS PER PK-70873-0239 (SEE SHEET 1 FOR FINISH SPECIFICATIONS) 15 GOLD		30 GOLD		50 GOLD		DIMENSION A	DIMENSION B		DIMENSION D
33	66		X	71973-9433	X	71973-9533	X	71973-9633	3.200 (81.28)	3.295 (83.69)		3.558 (90.37)
34	68		X	71973-9434	X	71973-9534	X	71973-9634	3.300 (83.82)	3.395 (86.23)		3.658 (92.91)
35	70		X	71973-9435	X	71973-9535	X	71973-9635	3.400 (86.36)	3.495 (88.77)		3.758 (95.45)
36	72		X	71973-9436	X	71973-9536	X	71973-9636	3.500 (88.90)	3.595 (91.31)		3.858 (97.99)

X INDICATES TOOLING IS NOT AVAILABLE

ADD OPTION K & L
EC NO: S2010-0534
DRWN:SKANG 2009/12/30
CH'KD:ATSEE 2010/01/08
APPR:MLONG 2010/01/14
DESCRIPTION
K
REV

QUALITY SYMBOLS
FA=0
FC=0
FB=0

GENERAL TOLERANCES (UNLESS SPECIFIED)

	mm	INCH
4 PLACES	± ---	± ---
3 PLACES	± ---	± .010
2 PLACES	± 0.25	± ---
1 PLACE	± ---	± ---
ANGULAR ±1/2°		

DRAFT WHERE APPLICABLE MUST REMAIN WITHIN DIMENSIONS

DIMENSION STYLE: IN/MM
SCALE: NTS
DESIGN UNITS: INCH
THIRD ANGLE PROJECTION

DRAWN BY: DJB DATE: 1991/10/21
CHECKED BY: DJB DATE: 1991/10/21
APPROVED BY: MLONG DATE: 2010/01/14

TITLE: EARLY ENTRY R/A RECPT .120"PC TAIL W/O LOWER ROW PINSTOP-.100" GRID

MOLEX INCORPORATED

MATERIAL NO.: SEE TABLE
DOCUMENT NO.: SDA-71973-****
SHEET NO.: 23 OF 26
SIZE: A3

THIS DRAWING CONTAINS INFORMATION THAT IS PROPRIETARY TO MOLEX INCORPORATED AND SHOULD NOT BE USED WITHOUT WRITTEN PERMISSION

NO. OF CKTS PER ROW	NO. OF CKTS TOTAL	OPTION I ASSEMBLY PACKAGED IN TUBES PER PK-70873-0138 (SEE SHEET 1 FOR FINISH SPECIFICATIONS) 15 GOLD	30 GOLD	50 GOLD	DIMENSION A	B	C	D
4	8	71973-9704	71973-9804	71973-9904	.300 (7.62)	.395 (10.03)	.200 (5.08)	.658 (16.71)
5	10	71973-9705	71973-9805	71973-9905	.400 (10.16)	.495 (12.57)	.300 (7.62)	.758 (19.25)
6	12	71973-9706	71973-9806	71973-9906	.500 (12.70)	.595 (15.11)	.400 (10.16)	.858 (21.79)
7	14	71973-9707	71973-9807	71973-9907	.600 (15.24)	.695 (17.65)	.500 (12.70)	.958 (24.33)
8	16	71973-9708	71973-9808	71973-9908	.700 (17.78)	.795 (20.19)	.600 (15.24)	1.058 (26.87)
9	18	71973-9709	71973-9809	71973-9909	.800 (20.32)	.895 (22.73)	.700 (17.78)	1.158 (29.41)
10	20	71973-9710	71973-9810	71973-9910	.900 (22.86)	.995 (25.27)	.800 (20.32)	1.258 (31.95)
11	22	71973-9711	71973-9811	71973-9911	1.000 (25.40)	1.095 (27.81)	.900 (22.86)	1.358 (34.49)
12	24	71973-9712	71973-9812	71973-9912	1.100 (27.94)	1.195 (30.35)	1.000 (25.40)	1.458 (37.03)
13	26	71973-9713	71973-9813	71973-9913	1.200 (30.48)	1.295 (32.89)	1.100 (27.94)	1.558 (39.57)
14	28	71973-9714	71973-9814	71973-9914	1.300 (33.02)	1.395 (35.43)	1.200 (30.48)	1.658 (42.11)
15	30	71973-9715	71973-9815	71973-9915	1.400 (35.56)	1.495 (37.97)	1.300 (33.02)	1.758 (44.65)
16	32	71973-9716	71973-9816	71973-9916	1.500 (38.10)	1.595 (40.51)	1.400 (35.56)	1.858 (47.19)
17	34	71973-9717	71973-9817	71973-9917	1.600 (40.64)	1.695 (43.05)	1.500 (38.10)	1.958 (49.73)
18	36	71973-9718	71973-9818	71973-9918	1.700 (43.18)	1.795 (45.59)	1.600 (40.64)	2.058 (52.27)
19	38	71973-9719	71973-9819	71973-9919	1.800 (45.72)	1.895 (48.13)	1.700 (43.18)	2.158 (54.81)
20	40	71973-9720	71973-9820	71973-9920	1.900 (48.26)	1.995 (50.67)	1.800 (45.72)	2.258 (57.35)
21	42	71973-9721	71973-9821	71973-9921	2.000 (50.80)	2.095 (53.21)	1.900 (48.26)	2.358 (59.89)
22	44	71973-9722	71973-9822	71973-9922	2.100 (53.34)	2.195 (55.75)	2.000 (50.80)	2.458 (62.43)
23	46	71973-9723	71973-9823	71973-9923	2.200 (55.88)	2.295 (58.29)	2.100 (53.34)	2.558 (64.97)
24	48	71973-9724	71973-9824	71973-9924	2.300 (58.42)	2.395 (60.83)	2.200 (55.88)	2.658 (67.51)
25	50	71973-9725	71973-9825	71973-9925	2.400 (60.96)	2.495 (63.37)	2.300 (58.42)	2.758 (70.05)
26	52	71973-9726	71973-9826	71973-9926	2.500 (63.50)	2.595 (65.91)	2.400 (60.96)	2.858 (72.59)
27	54	71973-9727	71973-9827	71973-9927	2.600 (66.04)	2.695 (68.45)	2.500 (63.50)	2.958 (75.13)
28	56	71973-9728	71973-9828	71973-9928	2.700 (68.58)	2.795 (70.99)	2.600 (66.04)	3.058 (77.67)
29	58	71973-9729	71973-9829	71973-9929	2.800 (71.12)	2.895 (73.53)	2.700 (68.58)	3.158 (80.21)
30	60	71973-9730	71973-9830	71973-9930	2.900 (73.66)	2.995 (76.07)	2.800 (71.12)	3.258 (82.75)
31	62	71973-9731	71973-9831	71973-9931	3.000 (76.20)	3.095 (78.61)	2.900 (73.66)	3.358 (85.29)
32	64	71973-9732	71973-9832	71973-9932	3.100 (78.74)	3.195 (81.15)	3.000 (76.20)	3.458 (87.83)
33	66	71973-9733	71973-9833	71973-9933	3.200 (81.28)	3.295 (83.69)	3.100 (78.74)	3.558 (90.37)

NO. OF CKTS PER ROW	NO. OF CKTS TOTAL	OPTION I ASSEMBLY PACKAGED IN TUBES PER PK-70873-0138 (SEE SHEET 1 FOR FINISH SPECIFICATIONS) 15 GOLD	30 GOLD	50 GOLD	DIMENSION A	B	C	D
34	68	71973-9734	71973-9834	71973-9934	3.300 (83.82)	3.395 (86.23)	3.200 (81.28)	3.658 (92.91)
35	70	71973-9735	71973-9835	71973-9935	3.400 (86.36)	3.495 (88.77)	3.300 (83.82)	3.758 (95.45)
36	72	71973-9736	71973-9836	71973-9936	3.500 (88.90)	3.595 (91.31)	3.400 (86.36)	3.858 (97.99)

"X" INDICATES TOOLING IS NOT AVAILABLE

ADD OPTION K & L
EC NO: S2010-0534
DRWN:SKANG 2009/12/30
CH'KD:ATSEE 2010/01/08
APPR:MLONG 2010/01/14
DESCRIPTION
K
REV

QUALITY SYMBOLS
FA=0
FC=0
FP=0

GENERAL TOLERANCES (UNLESS SPECIFIED)

	mm	INCH
4 PLACES	± ---	± ---
3 PLACES	± ---	± .010
2 PLACES	± 0.25	± ---
1 PLACE	± ---	± ---
ANGULAR ±1/2°		

DRAFT WHERE APPLICABLE MUST REMAIN WITHIN DIMENSIONS

DIMENSION STYLE: IN/MM
SCALE: NTS
DESIGN UNITS: INCH
THIRD ANGLE PROJECTION

DRAWN BY: DJB DATE: 1991/10/21
CHECKED BY: DJB DATE: 1991/10/21
APPROVED BY: MLONG DATE: 2010/01/14

TITLE: EARLY ENTRY R/A RECPT .120"PC TAIL W/O LOWER ROW PINSTOP-.100" GRID

MOLEX INCORPORATED

MATERIAL NO.: SEE TABLE
DOCUMENT NO.: SDA-71973-****
SHEET NO.: 24 OF 26
SIZE: A3

THIS DRAWING CONTAINS INFORMATION THAT IS PROPRIETARY TO MOLEX INCORPORATED AND SHOULD NOT BE USED WITHOUT WRITTEN PERMISSION

NO. OF CKTS PER ROW	NO. OF CKTS TOTAL	OPTION K ASSEMBLY PACKAGED IN TUBES PER PK-70873-0138 (SEE SHEET 1 FOR FINISH SPECIFICATIONS) 15 GOLD	30 GOLD	50 GOLD	DIMENSION A	DIMENSION B
4	8	71973-6204	71973-6304	71973-6404	.300 (7.62)	.395 (10.03)
5	10	71973-6205	71973-6305	71973-6405	.400 (10.16)	.495 (12.57)
6	12	71973-6206	71973-6306	71973-6406	.500 (12.70)	.595 (15.11)
7	14	71973-6207	71973-6307	71973-6407	.600 (15.24)	.695 (17.65)
8	16	71973-6208	71973-6308	71973-6408	.700 (17.78)	.795 (20.19)
9	18	71973-6209	71973-6309	71973-6409	.800 (20.32)	.895 (22.73)
10	20	71973-6210	71973-6310	71973-6410	.900 (22.86)	.995 (25.27)
11	22	71973-6211	71973-6311	71973-6411	1.000 (25.40)	1.095 (27.81)
12	24	71973-6212	71973-6312	71973-6412	1.100 (27.94)	1.195 (30.35)
13	26	71973-6213	71973-6313	71973-6413	1.200 (30.48)	1.295 (32.89)
14	28	71973-6214	71973-6314	71973-6414	1.300 (33.02)	1.395 (35.43)
15	30	71973-6215	71973-6315	71973-6415	1.400 (35.56)	1.495 (37.97)
16	32	71973-6216	71973-6316	71973-6416	1.500 (38.10)	1.595 (40.51)
17	34	71973-6217	71973-6317	71973-6417	1.600 (40.64)	1.695 (43.05)
18	36	71973-6218	71973-6318	71973-6418	1.700 (43.18)	1.795 (45.59)
19	38	71973-6219	71973-6319	71973-6419	1.800 (45.72)	1.895 (48.13)
20	40	71973-6220	71973-6320	71973-6420	1.900 (48.26)	1.995 (50.67)
21	42	71973-6221	71973-6321	71973-6421	2.000 (50.80)	2.095 (53.21)
22	44	71973-6222	71973-6322	71973-6422	2.100 (53.34)	2.195 (55.75)
23	46	71973-6223	71973-6323	71973-6423	2.200 (55.88)	2.295 (58.29)
24	48	71973-6224	71973-6324	71973-6424	2.300 (58.42)	2.395 (60.83)
25	50	71973-6225	71973-6325	71973-6425	2.400 (60.96)	2.495 (63.37)
26	52	71973-6226	71973-6326	71973-6426	2.500 (63.50)	2.595 (65.91)
27	54	71973-6227	71973-6327	71973-6427	2.600 (66.04)	2.695 (68.45)
28	56	71973-6228	71973-6328	71973-6428	2.700 (68.58)	2.795 (70.99)
29	58	71973-6229	71973-6329	71973-6429	2.800 (71.12)	2.895 (73.53)
30	60	71973-6230	71973-6330	71973-6430	2.900 (73.66)	2.995 (76.07)
31	62	71973-6231	71973-6331	71973-6431	3.000 (76.20)	3.095 (78.61)

NO. OF CKTS PER ROW	NO. OF CKTS TOTAL	OPTION K ASSEMBLY PACKAGED IN TUBES PER PK-70873-0138 (SEE SHEET 1 FOR FINISH SPECIFICATIONS) 15 GOLD	30 GOLD	50 GOLD	DIMENSION A	DIMENSION B
32	64	71973-6232	71973-6332	71973-6432	3.100 (78.74)	3.195 (81.15)
33	66	71973-6233	71973-6333	71973-6433	3.200 (81.28)	3.295 (83.69)
34	68	71973-6234	71973-6334	71973-6434	3.300 (83.82)	3.395 (86.23)
35	70	71973-6235	71973-6335	71973-6435	3.400 (86.36)	3.495 (88.77)
36	72	71973-6236	71973-6336	71973-6436	3.500 (88.90)	3.595 (91.31)

"X" INDICATES TOOLING IS NOT AVAILABLE

ADD OPTION K & L
EC NO: S2010-0534
DRWN:SKANG 2009/12/30
CH'KD:ATSEE 2010/01/08
APPR:MLONG 2010/01/14
DESCRIPTION
K
REV

QUALITY SYMBOLS
F/A=0
F/C=0
F/P=0

GENERAL TOLERANCES (UNLESS SPECIFIED)

	mm	INCH
4 PLACES	± ---	± ---
3 PLACES	± ---	± .010
2 PLACES	± 0.25	± ---
1 PLACE	± ---	± ---
ANGULAR ±1/2°		

DRAFT WHERE APPLICABLE MUST REMAIN WITHIN DIMENSIONS

DIMENSION STYLE: IN/MM
SCALE: NTS
DESIGN UNITS: INCH
THIRD ANGLE PROJECTION

DRAWN BY: DJB DATE: 1991/10/21
CHECKED BY: DJB DATE: 1991/10/21
APPROVED BY: MLONG DATE: 2010/01/14

TITLE: EARLY ENTRY R/A RECPT .120"PC TAIL W/O LOWER ROW PINSTOP-.100" GRID

MOLEX INCORPORATED

MATERIAL NO.: SEE TABLE
DOCUMENT NO.: SDA-71973-****
SHEET NO.: 25 OF 26
SIZE: A3

THIS DRAWING CONTAINS INFORMATION THAT IS PROPRIETARY TO MOLEX INCORPORATED AND SHOULD NOT BE USED WITHOUT WRITTEN PERMISSION

NO. OF CKTS PER ROW	NO. OF CKTS TOTAL	OPTION L ASSEMBLY PACKAGED IN TUBES PER PK-70873-0138 (SEE SHEET 1 FOR FINISH SPECIFICATIONS) 15 GOLD	30 GOLD	50 GOLD	DIMENSION A	DIMENSION B
4	8	71973-5404	71973-5504	71973-5604	.300 (7.62)	.395 (10.03)
5	10	71973-5405	71973-5505	71973-5605	.400 (10.16)	.495 (12.57)
6	12	71973-5406	71973-5506	71973-5606	.500 (12.70)	.595 (15.11)
7	14	71973-5407	71973-5507	71973-5607	.600 (15.24)	.695 (17.65)
8	16	71973-5408	71973-5508	71973-5608	.700 (17.78)	.795 (20.19)
9	18	71973-5409	71973-5509	71973-5609	.800 (20.32)	.895 (22.73)
10	20	71973-5410	71973-5510	71973-5610	.900 (22.86)	.995 (25.27)
11	22	71973-5411	71973-5511	71973-5611	1.000 (25.40)	1.095 (27.81)
12	24	71973-5412	71973-5512	71973-5612	1.100 (27.94)	1.195 (30.35)
13	26	71973-5413	71973-5513	71973-5613	1.200 (30.48)	1.295 (32.89)
14	28	71973-5414	71973-5514	71973-5614	1.300 (33.02)	1.395 (35.43)
15	30	71973-5415	71973-5515	71973-5615	1.400 (35.56)	1.495 (37.97)
16	32	71973-5416	71973-5516	71973-5616	1.500 (38.10)	1.595 (40.51)
17	34	71973-5417	71973-5517	71973-5617	1.600 (40.64)	1.695 (43.05)
18	36	71973-5418	71973-5518	71973-5618	1.700 (43.18)	1.795 (45.59)
19	38	71973-5419	71973-5519	71973-5619	1.800 (45.72)	1.895 (48.13)
20	40	71973-5420	71973-5520	71973-5620	1.900 (48.26)	1.995 (50.67)
21	42	71973-5421	71973-5521	71973-5621	2.000 (50.80)	2.095 (53.21)
22	44	71973-5422	71973-5522	71973-5622	2.100 (53.34)	2.195 (55.75)
23	46	71973-5423	71973-5523	71973-5623	2.200 (55.88)	2.295 (58.29)
24	48	71973-5424	71973-5524	71973-5624	2.300 (58.42)	2.395 (60.83)
25	50	71973-5425	71973-5525	71973-5625	2.400 (60.96)	2.495 (63.37)
26	52	71973-5426	71973-5526	71973-5626	2.500 (63.50)	2.595 (65.91)
27	54	71973-5427	71973-5527	71973-5627	2.600 (66.04)	2.695 (68.45)
28	56	71973-5428	71973-5528	71973-5628	2.700 (68.58)	2.795 (70.99)
29	58	71973-5429	71973-5529	71973-5629	2.800 (71.12)	2.895 (73.53)
30	60	71973-5430	71973-5530	71973-5630	2.900 (73.66)	2.995 (76.07)

NO. OF CKTS PER ROW	NO. OF CKTS TOTAL	OPTION L ASSEMBLY PACKAGED IN TUBES PER PK-70873-0138 (SEE SHEET 1 FOR FINISH SPECIFICATIONS) 15 GOLD	30 GOLD	50 GOLD	DIMENSION A	DIMENSION B
31	62	71973-5431	71973-5531	71973-5631	3.000 (76.20)	3.095 (78.61)
32	64	71973-5432	71973-5532	71973-5632	3.100 (78.74)	3.195 (81.15)
33	66	71973-5433	71973-5533	71973-5633	3.200 (81.28)	3.295 (83.69)
34	68	71973-5434	71973-5534	71973-5634	3.300 (83.82)	3.395 (86.23)
35	70	71973-5435	71973-5535	71973-5635	3.400 (86.36)	3.495 (88.77)
36	72	71973-5436	71973-5536	71973-5636	3.500 (88.90)	3.595 (91.31)

"X" INDICATES TOOLING IS NOT AVAILABLE

REV	DESCRIPTION	
K	ADD OPTION K & L	
	EC NO: S2010-0534	2009/12/30
	DRWN:SKANG	2010/01/08
	CH'KD:ATSEE	2010/01/14
	APPR:MLONG	

QUALITY SYMBOLS

F_A=0

F_C=0

F_P=0

GENERAL TOLERANCES (UNLESS SPECIFIED)

	mm	INCH
4 PLACES	± ---	± ---
3 PLACES	± ---	± .010
2 PLACES	± 0.25	± ---
1 PLACE	± ---	± ---
ANGULAR ±1/2°		

DRAFT WHERE APPLICABLE MUST REMAIN WITHIN DIMENSIONS

DIMENSION STYLE: IN/MM

SCALE: NTS

DESIGN UNITS: INCH

THIRD ANGLE PROJECTION

DRAWN BY: DJB	DATE: 1991/10/21	TITLE: EARLY ENTRY R/A RECPT .120"PC TAIL W/O LOWER ROW PINSTOP-.100" GRID
CHECKED BY: DJB	DATE: 1991/10/21	
APPROVED BY: MLONG	DATE: 2010/01/14	MOLEX INCORPORATED
MATERIAL NO.: SEE TABLE		DOCUMENT NO.: SDA-71973-****
SIZE: A3		SHEET NO.: 26 OF 26

THIS DRAWING CONTAINS INFORMATION THAT IS PROPRIETARY TO MOLEX INCORPORATED AND SHOULD NOT BE USED WITHOUT WRITTEN PERMISSION

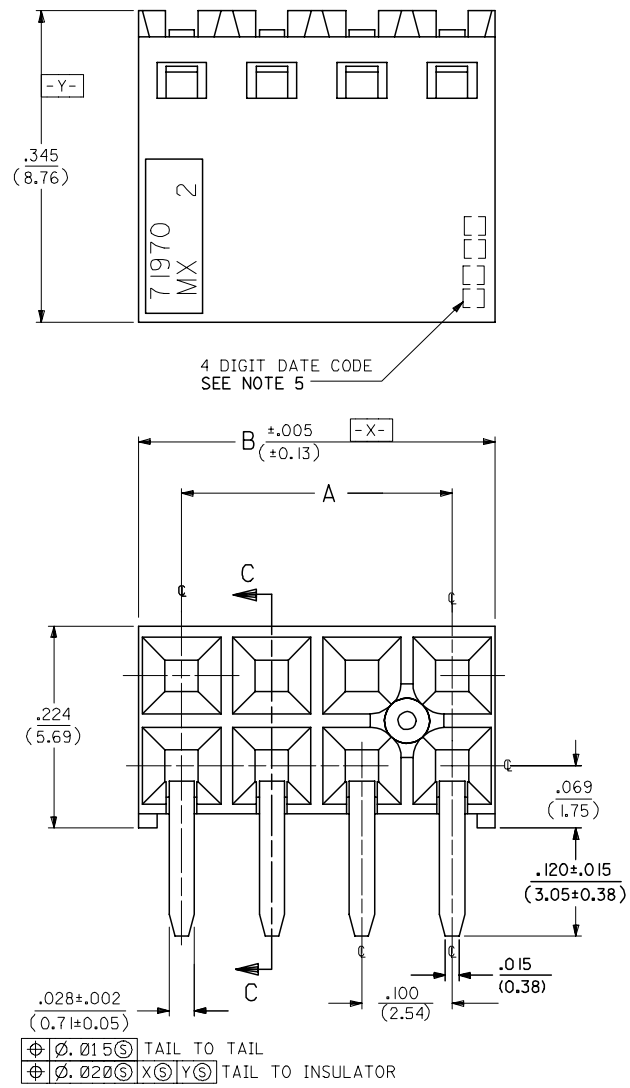

OPTION "E" ASSEMBLY

STANDARD HOUSING

NOTES:

1.) MATERIAL-
INSULATOR - LCP, UL 94V-0, COLOR BLACK
CONTACTS - PHOSPHOR BRONZE

2.) SEE SHT. 13 & 14 FOR CHART DIMENSIONS AND EDP NO.'S

3.) RECOMMENDED MATING PIN LENGTH:
LOWER ROW - .200" MIN., .250" MAX.
UPPER ROW - .200" MIN.

4.) REFER TO PRODUCT SPECIFICATION PS-71973-9999 FOR PERFORMANCE DATA

5.) MANUFACTURED DATE CODE - YEAR,WEEK.

6.) PACKAGING: FOR THIS PRODUCT IN TUBES SEE SHT. 14 & 15
FOR THIS PRODUCT IN TRAYS SEE SHT. 16 & 17

FINISHES

15 GOLD .000015 MINIMUM GOLD PLATE IN SELECT AREA OVER
.000050 MINIMUM NICKEL UNDERPLATE OVER-ALL WITH
.000075 MINIMUM TIN PLATE IN SELECT AREA.

30 GOLD .000030 MINIMUM GOLD PLATE IN SELECT AREA OVER
.000050 MINIMUM NICKEL UNDERPLATE OVER-ALL WITH
.000075 MINIMUM TIN PLATE IN SELECT AREA.

50 GOLD .000050 MINIMUM GOLD PLATE IN SELECT AREA OVER
.000050 MINIMUM NICKEL UNDERPLATE OVER-ALL WITH
.000100 MINIMUM TIN PLATE IN SELECT AREA.

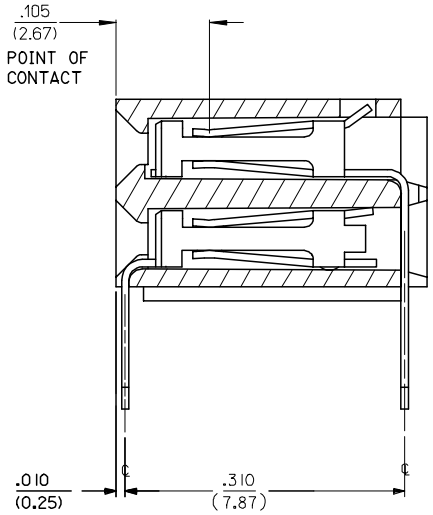

SECTION C-C

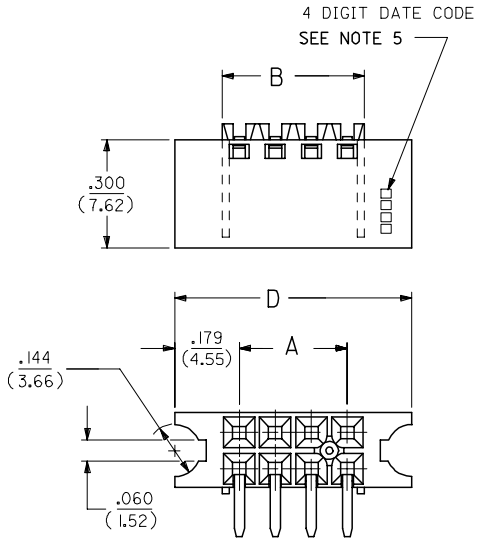

OPTION "F" ASSEMBLY

STD. HOUSING W/MOUNTING EARS
AND LOWER ROW PINSTOP
SCALE 4:1

REFER TO OPT. E FOR ALL OTHER INFORMATION

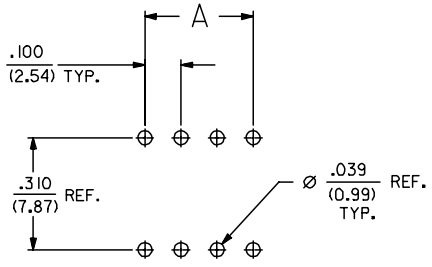

RECOMMENDED P.C.B. LAYOUT

SCALE 4:1

NOTE FOR LEAD FREE CONVERSION:

THE PRIMARY SHIPPING CARTON WILL BE LABELED "COMPLIANT TO RoHS DIRECTIVE 2002/95/EC AND ELV ANNEX II OF DIRECTIVE 2000/53/EC". CARTONS WITHOUT THIS LABEL MAY CONTAIN PRODUCT WITH LEAD.

MODIFY CONTACT DIM EC NO: UCP2006-1252 DRWN:DMORGAN 2005/12/01 CH'KD:BBARKER 2005/12/08 APPR:SMILLER 2005/12/09	QUALITY SYMBOLS ▼=0 C=0	GENERAL TOLERANCES (UNLESS SPECIFIED) mm / INCH 4 PLACES ± --- / ± --- 3 PLACES ± --- / ± .010 2 PLACES ± 0.25 / ± --- 1 PLACE ± --- / ± --- ANGULAR ±1/2°	DIMENSION STYLE IN/MM	SCALE 10:1	DESIGN UNITS INCH	THIRD ANGLE PROJECTION	
REV	DESCRIPTION	DRAFT WHERE APPLICABLE MUST REMAIN WITHIN DIMENSIONS	DRAWN BY DJB DATE 1991/10/21 CHECKED BY DJB DATE 1991/10/21 APPROVED BY MJM DATE 1991/10/21	TITLE EARLY ENTRY R/A RECPT .120 PC TAIL, WITH LOWER ROW PINSTOP- .100 GRID			
			MATERIAL NO. SHTS 14-17	DOCUMENT NO. SDA-71973-****		SHEET NO. 3 OF 22	
			SIZE C	THIS DRAWING CONTAINS INFORMATION THAT IS PROPRIETARY TO MOLEX INCORPORATED AND SHOULD NOT BE USED WITHOUT WRITTEN PERMISSION			

tb_frame_C_P_ME_T
Rev. D 2004/04/02

NO. OF CKTS PER ROW	NO. OF CKTS TOTAL	OPTION E ASSEMBLY PACKAGED IN TUBES PER PK-70873-0138 (SEE SHEET 1 FOR FINISH SPECIFICATIONS) 15 GOLD	30 GOLD	50 GOLD	DIMENSION A	DIMENSION B
4	8	71973-3404	71973-3504	71973-3604	.300 (7.62)	.395 (10.03)
5	10	71973-3405	71973-3505	71973-3605	.400 (10.16)	.495 (12.57)
6	12	71973-3406	71973-3506	71973-3606	.500 (12.70)	.595 (15.11)
7	14	71973-3407	71973-3507	71973-3607	.600 (15.24)	.695 (17.65)
8	16	71973-3408	71973-3508	71973-3608	.700 (17.78)	.795 (20.19)
9	18	71973-3409	71973-3509	71973-3609	.800 (20.32)	.895 (22.73)
10	20	71973-3410	71973-3510	71973-3610	.900 (22.86)	.995 (25.27)
11	22	71973-3411	71973-3511	71973-3611	1.000 (25.40)	1.095 (27.81)
12	24	71973-3412	71973-3512	71973-3612	1.100 (27.94)	1.195 (30.35)
13	26	71973-3413	71973-3513	71973-3613	1.200 (30.48)	1.295 (32.89)
14	28	71973-3414	71973-3514	71973-3614	1.300 (33.02)	1.395 (35.43)
15	30	71973-3415	71973-3515	71973-3615	1.400 (35.56)	1.495 (37.97)
16	32	71973-3416	71973-3516	71973-3616	1.500 (38.10)	1.595 (40.51)
17	34	71973-3417	71973-3517	71973-3617	1.600 (40.64)	1.695 (43.05)
18	36	71973-3418	71973-3518	71973-3618	1.700 (43.18)	1.795 (45.59)
19	38	71973-3419	71973-3519	71973-3619	1.800 (45.72)	1.895 (48.13)
20	40	71973-3420	71973-3520	71973-3620	1.900 (48.26)	1.995 (50.67)
21	42	71973-3421	71973-3521	71973-3621	2.000 (50.80)	2.095 (53.21)
22	44	71973-3422	71973-3522	71973-3622	2.100 (53.34)	2.195 (55.75)
23	46	71973-3423	71973-3523	71973-3623	2.200 (55.88)	2.295 (58.29)
24	48	71973-3424	71973-3524	71973-3624	2.300 (58.42)	2.395 (60.83)
25	50	71973-3425	71973-3525	71973-3625	2.400 (60.96)	2.495 (63.37)
26	52	71973-3426	71973-3526	71973-3626	2.500 (63.50)	2.595 (65.91)
27	54	71973-3427	71973-3527	71973-3627	2.600 (66.04)	2.695 (68.45)
28	56	71973-3428	71973-3528	71973-3628	2.700 (68.58)	2.795 (70.99)
29	58	71973-3429	71973-3529	71973-3629	2.800 (71.12)	2.895 (73.53)
30	60	71973-3430	71973-3530	71973-3630	2.900 (73.66)	2.995 (76.07)
31	62	71973-3431	71973-3531	71973-3631	3.000 (76.20)	3.095 (78.61)
32	64	71973-3432	71973-3532	71973-3632	3.100 (78.74)	3.195 (81.15)
33	66	71973-3433	71973-3533	71973-3633	3.200 (81.28)	3.295 (83.69)

NO. OF CKTS PER ROW	NO. OF CKTS TOTAL	OPTION E ASSEMBLY PACKAGED IN TUBES PER PK-70873-0138 (SEE SHEET 1 FOR FINISH SPECIFICATIONS) 15 GOLD	30 GOLD	50 GOLD	DIMENSION A	DIMENSION B
34	68	71973-3434	71973-3534	71973-3634	3.300 (83.82)	3.395 (86.23)
35	70	71973-3435	71973-3535	71973-3635	3.400 (86.36)	3.495 (88.77)
36	72	71973-3436	71973-3536	71973-3636	3.500 (88.90)	3.595 (91.31)

"X" INDICATES TOOLING IS NOT AVAILABLE

REMOVE 74-130 CKT
EC NO: UCP2007-0113
DRWN:DMORGAN 2006/08/07
CHKD:MSIBARRA 2006/08/16
APPR:SMILLER 2006/08/18
REV DESCRIPTION

QUALITY SYMBOLS
▼=0
⚠=0

GENERAL TOLERANCES (UNLESS SPECIFIED)

	mm	INCH
4 PLACES	± ---	± ---
3 PLACES	± ---	± ---
2 PLACES	± ---	± ---
1 PLACE	± ---	± ---
ANGULAR ±1/2°		

DRAFT WHERE APPLICABLE MUST REMAIN WITHIN DIMENSIONS

DIMENSION STYLE: IN/MM
SCALE: ---
DESIGN UNITS: INCH
THIRD ANGLE PROJECTION

DRAWN BY: DJB DATE: 1991/10/21
CHECKED BY DATE
APPROVED BY DATE

TITLE: RECEPTACLE-RIGHT ANGLE .120 PC TAIL, WITH LOWER ROW PINSTOP - .100 GRID

molex MOLEX INCORPORATED

MATERIAL NO.: SEE CHART
DOCUMENT NO.: SDA-71973-****
SHEET NO.: 14 OF 22
SIZE: C

THIS DRAWING CONTAINS INFORMATION THAT IS PROPRIETARY TO MOLEX INCORPORATED AND SHOULD NOT BE USED WITHOUT WRITTEN PERMISSION