MCP2122

Infrared Encoder/Decoder

Features

- Pinout compatible with HSDL-7000
- Compliant with IrDA® Standard Physical Layer Specification (version 1.3)
- UART to IrDA Standard Encoder/Decoder
  - Interfaces with IrDA Standard Compliant Transceiver
- Baud rates:
  - Up to IrDA standard 115.2 Kbaud operation
- Transmit/Receive formats (bit width) supported:
  - 1.63 µs
- Low-power mode (2 µA at 1.8V, +125°C)

CMOS Technology

- Low-voltage operation
- Extended temperature range
- Low power consumption

Package Types

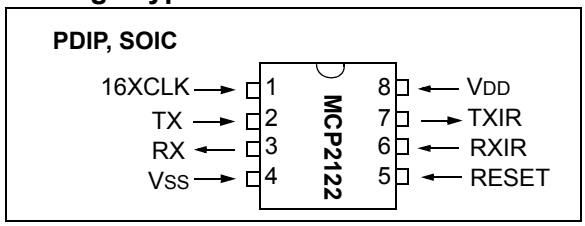

Block Diagram

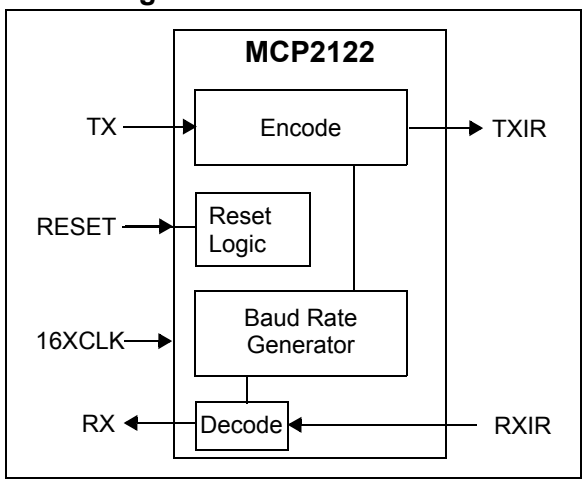

IrDA Family Selection

Device	Baud Rate		Encoder/ Decoder	Protocol Layer Handler	Clock Source	Host UART Baud Rate Selection	Comment
	Host UART	IR					
MCP2120	2400 - 312,500 (1)	2400 - 312,500 (1)	Yes	No	XTAL	HW/SW	
MCP2122	2400 - 115,200 (1)	2400 - 312,500 (1)	Yes	No	16XCLK	By 16XCLK	Extended Temperature Range (-40°C to +125°C)
MCP2140	9600	9600	Yes	IrCOMM (3)	XTAL	None -Fixed	
MCP2150	9600 - 115,200 (2)	9600 - 115,200 (2)	Yes	IrCOMM (3)	XTAL	HW	Host UART easily interfaces to a PC's serial port (DTE)
MCP2155	9600 - 115,200 (2)	9600 - 115,200 (2)	Yes	IrCOMM (3)	XTAL	HW	Host UART easily interfaces to a modem's serial port (DCE)

Note 1: The host UART and the IR operate at the same baud rates.

2: The host UART baud rate and the IR baud rates operate independent of each other.

3: Supports the 9-wire "cooked" service class of the IrCOMM Application Layer Protocol.

NOTES:

1.0 DEVICE OVERVIEW

The MCP2122 is a stand-alone IrDA standard encoder/decoder device that is pinout-compatible with the Agilent® HSDL-7000 Encoder/Decoder.

The MCP2122 has two interfaces: the host UART interface and the IR interface (see Figure 1-1). The host UART interfaces to the UART of the host controller. The host controller is the device in the embedded system that transmits and receives the data. The IR interface connects to an infrared (IR) optical transceiver circuit, which converts electrical pulses into IR light (encode) and converts IR light into electrical pulses (decode). This IR optical transceiver circuit could be either a standard infrared (IR) optical transceiver (such as a Vishay® TFDU 4100) or it could be implemented with discrete components. For additional information, please refer to Application Note 243, “Fundamentals of the Infrared Physical Layer” (DS00243).

When the host controller transmits the UART format data, the MCP2122 receives this UART data and encodes (modulates) the data bit by bit. This encoded data is then output as electrical pulses to the IR Transceiver. The IR transceiver will then convert these electrical pulses to IR light pulses.

The IR Transceiver also receives IR light pulses (data), which are outputted as electrical pulses. The MCP2122 decodes (demodulates) these electrical pulses, with the data then transmitted by the MCP2122 UART. This modulation and demodulation method is performed in accordance with the IrDA standard.

Table 1-1 shows an overview of some of the device features. Figure 1-1 shows a typical application block diagram. Table 1-2 shows the pin definitions of the MCP2122 in normal operation.

TABLE 1-1: MCP2122 FEATURES OVERVIEW

Features	MCP2122
Serial Communications:	UART, IR
Baud Rate Selection:	16XCLK
Low Power Mode:	Yes
Resets: (and Delays)	RESET pin (none)
Packages:	8-pin PDIP 8-pin SOIC

Infrared Technology Features:

- Universal standard for connecting portable computing devices
- Easy, effortless implementation
- Economical alternative to other connectivity solutions
- Reliable, high speed connection
- Safe to use in any environment; can even be used during air travel
- Eliminates the hassle of cables
- Allows PC’s and non-PC’s to communicate to each other
- Enhances mobility by allowing users to easily connect

1.1 Applications

Some applications where an IR interface (**MCP2122**) could be used include:

- Data Logging/Data Exchange
- System Setup
- System Diagnostic Read Out
- Manufacturing Configuration
- Host Controller Firmware Updates
- System Control

FIGURE 1-1: SYSTEM BLOCK DIAGRAM

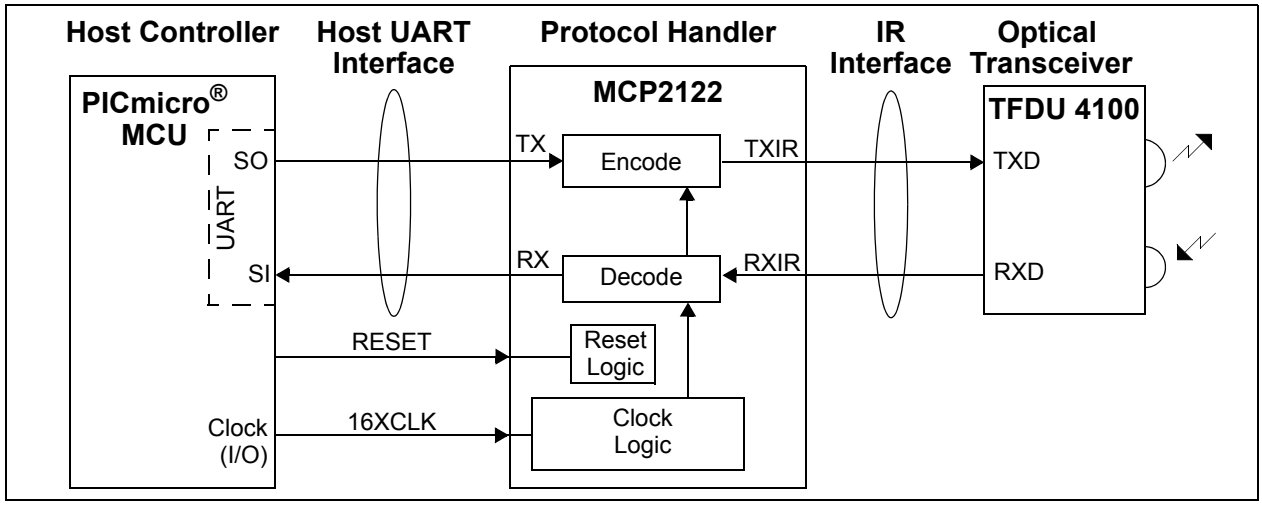

TABLE 1-2: PIN DESCRIPTION

Pin Name	Pin Number		Pin Type	Buffer Type	Description
	PDIP	SOIC			
16XCLK	1	1	I	ST	16x external clock source input
TX	2	2	I	ST	Asynchronous receive from host controller UART
RX	3	3	O	—	Asynchronous transmit to host controller UART
V_{SS}	4	4	—	P	Ground reference for logic and I/O pins
RESET	5	5	I	ST	Resets the Device H = Normal Operation L = Device in Reset
RXIR	6	6	I	ST	Asynchronous receive from infrared transceiver
TXIR	7	7	O	—	Asynchronous transmit to infrared transceiver
V_{DD}	8	8	—	P	Positive supply for logic and I/O pins

Legend: ST = Schmitt Trigger input with CMOS levels
I = Input O = Output
P = Power

2.0 DEVICE OPERATION

The MCP2122 is a low-cost infrared encoder/decoder. The baud rate is the same for the host UART and IR interfaces and is determined by the frequency of the 16XCLK signal, with a maximum baud rate of 115.2 Kbaud.

The MCP2122 is made up of these functional modules:

- Clock Driver (16XCLK)
- Reset
- IR Encoder/Decoder
  - IrDA Standard Encoder
  - IrDA Standard Decoder

The **16XCLK** circuit allows a clock input to provide the device clock.

The **Reset** circuit supports an external reset signal.

The **IR Encoder** logic takes a data bit and converts it to the IrDA signal according to the IrDA Standard Physical Layer specification, while the **IR Decoder** logic takes the IrDA standard signal and converts it to 8-bit data bytes.

2.1 Power-up

As the device is powered up, there will be a voltage range where the device will not operate properly. The device should be reset once the device has entered the normal operating range (from an out-of-voltage condition). The RESET pin may then be forced high.

Other device operating parameters (such as frequency, temperature, etc.) must also be within their operating ranges when the device exits reset. Otherwise, the device may not function as desired.

2.2 Device Reset

The MCP2122 is forced into the known state (RESET) when the $\overline{\text{RESET}}$ pin is in the low state. Once the $\overline{\text{RESET}}$ pin is brought to a high state, the device begins normal operation (if the device operating parameters are met). Table 2-1 shows the states of the output pins while the device is in reset (RESET = Low). Table 2-2 shows the state of the output pins once the device exits reset, RESET = L→H (device in Normal Operation mode).

The MCP2122 has a $\overline{\text{RESET}}$ noise filter in the $\overline{\text{RESET}}$ input signal path. The filter will detect and ignore small pulses.

Using the RESET pin to enter a low-power state is discussed in **Section 2.9 "Minimizing Power"**.

TABLE 2-1: DEFAULT OUTPUT PIN STATES IN DEVICE RESET

Input Pin		Output Pin State		Comments
Name	State	RX	TXIR	
RESET	L	H	L	Device in Reset mode

TABLE 2-2: DEFAULT OUTPUT PIN STATES AFTER DEVICE RESET (RESET = L→H)

Input Pin		Output Pin State		Comments
Name	State	RX	TXIR	
TX	L	—	L→H →L	After 7 - 8 16XCLK pulses, the TXIR pin will pulse high.
	H	—	L	
RXIR	L	H→L	—	After 4 16XCLK pulses, RX = L.
	H	H	—	

2.3 Decoupling

It is highly recommended that the MCP2122 have a decoupling capacitor (C_{BYP}). A 0.01 µF capacitor is recommended as a starting value, but evaluation of the best value for your circuit/layout should be done. Place this decoupling capacitor (C_{BYP}) as close to the MCP2122 as possible (see Figure 2-1).

FIGURE 2-1: DEVICE DECOUPLING

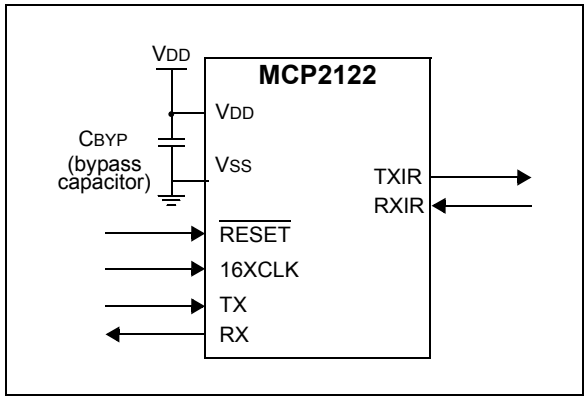

2.3.1 BROWN-OUTS

Some applications may subject the MCP2122 to a brown-out condition. Good design practice requires that when a system is in brown-out, the system should be in reset to ensure that the system is in a known state when the system exits the brown-out. This brown-out circuitry is external to the MCP2122.

2.3.1.1 External Brown-Out Reset Circuits

Figure 2-2 shows a circuit for external brown-out protection using the TCM809 device.

Figure 2-3 and Figure 2-4 illustrate two examples of external circuitry that may be implemented. Each option needs to be evaluated to determine if they satisfy the requirements of the application.

FIGURE 2-2: EXTERNAL BROWN-OUT PROTECTION USING THE TCM809

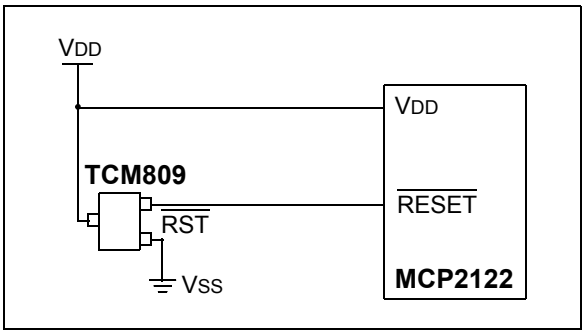

FIGURE 2-3: EXTERNAL BROWN-OUT PROTECTION CIRCUIT 1

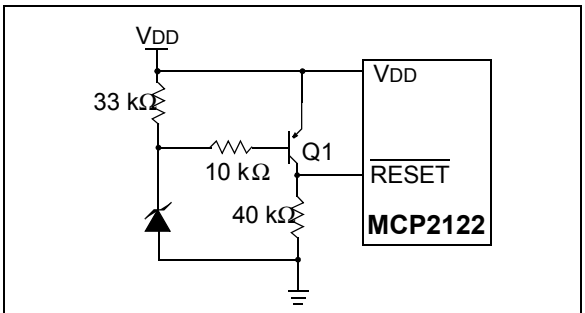

Note 1: Resistors should be adjusted for the characteristics of the transistor.

2: This circuit will activate reset when VDD goes below (Vz + 0.7V), where Vz = Zener voltage.

FIGURE 2-4: EXTERNAL BROWN-OUT PROTECTION CIRCUIT 2

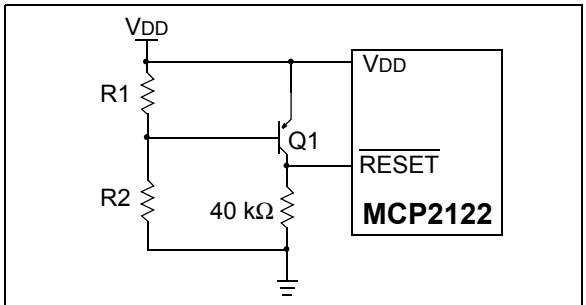

Note 1: This circuit is less expensive, but less accurate. Transistor Q1 turns off when VDD is below a certain level such that:

$$V_{DD} \cdot \frac{R1}{R1 + R2} = 0.7V$$

2: Resistors should be adjusted for the characteristics of the transistor.

2.4 16XCLK (Bit Clock)

The MCP2122 requires an external clock source to operate. The 16XCLK pin is the device clock input (see Figure 2-5) and is independent of the host UART interface or the IR interface. The 16XCLK determines all timing during device operation. It is the edge of the 16XCLK pin that causes activity to occur.

The 16XCLK signal can also be referred to as a bit clock (BITCLK). There are 16 BITCLKs for each bit time. The BITCLKs are used for the generation of the Start bit, the eight data bits and the Stop bit.

When the embedded system could be receiving IR communication, the MCP2122 is required to have the 16XCLK signal clocking at the expected frequency and have minimal variation in frequency. Between data bytes (Stop bit to Start bit), the 16XCLK frequency can be changed. This may occur in systems where the host controller is implementing one of the IrDA standard application layer protocols (such as IrObex).

When the embedded system does not want to receive IR communications, the 16XCLK clock can be disabled (static). This will reduce the power consumption of the system.

Figure 2-6 shows the relationship of the 16XCLK signal to the RXIR input, which then determines the RX output signal. Figure 2-7 shows the relationship of the 16XCLK signal to the TX input, which then determines the TXIR output signal. For device timing information, refer to **Section 4.0 "Electrical Characteristics"**.

FIGURE 2-5: DEVICE CLOCK SOURCE

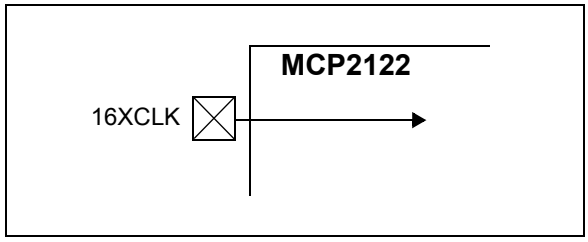

FIGURE 2-6: 16XCLK AND RX/RXIR

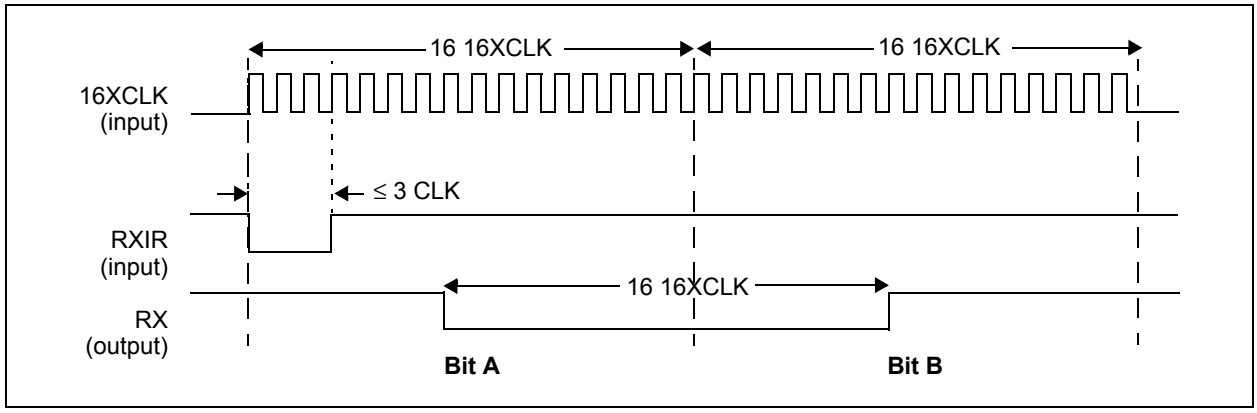

FIGURE 2-7: 16XCLK AND TX/TXIR

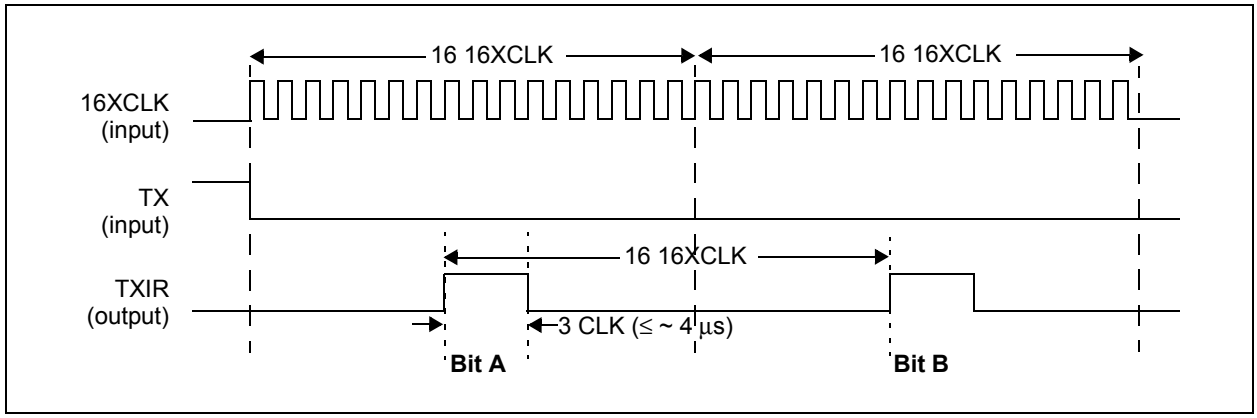

2.4.1 BAUD RATE

The baud rate for the MCP2122 is determined by the frequency of the 16XCLK signal. Equation 2-1 demonstrates how to calculate the 16XCLK frequency based on the desired baud rate. Table 2-3 shows some common baud rates and the corresponding 16XCLK frequency.

EQUATION 2-1: 16XCLK FREQUENCY

$$F_{16XCLK} = 16 \bullet (\text{Desired Baud Rate})$$

TABLE 2-3: COMMON BAUD RATE/ 16XCLK FREQUENCY

Baud Rate	16XCLK Frequency (F_{16XCLK})	Comment
9600	153,600	
19,200	307,200	
38,400	614,400	
57,600	921,600	
115,200	1,843,200	

2.5 Encoder/Decoder

The IR Encoder/Decoder is made up of two major components. They are:

- IR Decoder
- IR Encoder

The encoder receives UART data (bit by bit) and outputs a data bit in the IrDA standard bit format. Figure 2-8 shows a functional block diagram of the encoder.

The decoder receives IrDA standard data (bit by bit) and outputs data in UART data bit format. Figure 2-8 shows a functional block diagram of the decoder.

The encoder/decoder has two interfaces. They are:

- host UART interface
- IR interface

2.5.1 ENCODING (MODULATION)

Each bit time is comprised of 16 bit clocks. If the value to be transmitted (as determined by the TX pin) is a logic-low, the TXIR pin will output a low level for 7-bit clock cycles, a logic-high level for 3-bit clock (with a maximum high-time of about 4 µs) cycles, with the remaining time (6-bit clock cycles or more) being low. If the value to transmit is a logic-high, the TXIR pin will output a low level for the entire 16 bit clock cycle.

2.5.2 DECODING (DEMODULATION)

Each bit time is comprised of 16 bit clocks. If the value to be received is a logic-low, the RXIR pin will be a low level for the first 3-bit clock cycle (or a minimum of 1.6 µs), with the remaining time (13-bit clock cycles) being high. If the value to be received is a logic high, the RXIR pin will be a high level for the entire 16 bit clock cycle. The level on the RX pin will be in the appropriate state for an entire 16-bit clock cycle.

FIGURE 2-8: MCP2122 RECEIVE DETECT TO ENCODER/DECODER BLOCK DIAGRAM

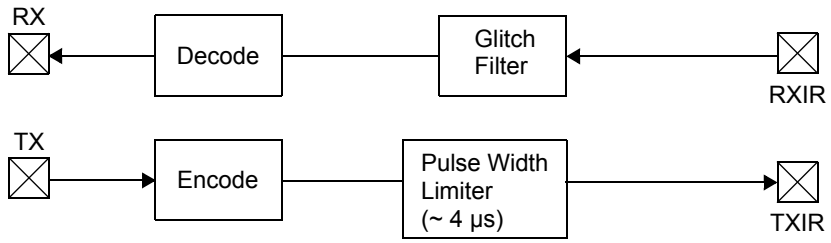

The following table shows the state on the $\overline{\text{RESET}}$ pin and how this effects the operation of the TXIR pin.

$\overline{\text{RESET}}$ State	Comment
VIH	TXIR output encoded value of TX pin
VIL	TXIR is forced low

2.5.3 ENCODING AND SCREEN CAPTURES

Table 2-4 shows the TXIR pin high-time at different common baud rates. The internal TXIR pulse width high-time limiter is a feature that minimizes the system current consumption at lower baud rates. The IrDA standard specification requires that optical receiver circuitry detect pulses as narrow as 1.41 µs (1.63 µs is the typical time at 115200 baud). Therefore, the time that the TXIR pin is high after this valid detection is additional current that is driven by the emitter LED. The MCP2122 will force the TXIR pin low after the pulse width limiter has timed out. Figure 2-9 shows the MCP2122 16XCLK, TX and TXIR waveforms at 115200 baud for a single TX low bit. In this case the TXIR is high for three 16XCLK pulses. In Figure 2-10 the MCP2122 is at 9600 baud for a single TX low bit. In this case the TXIR is high for 3.55 µs.

TABLE 2-4: TXIR HIGH PULSE WIDTH

Baud Rate	TXIR Pulse Width		Comment
	$3xT_{16XCLK}$	Pulse Width Limiter (2)	
9600	19.53 µs	4.00 µs	**Note 1**
19200	9.77 µs	4.00 µs	**Note 1**
38400	4.88 µs	4.00 µs	**Note 1**
46875	4.00 µs	4.00 µs	Target Crossover Point
57600	3.26 µs	4.00 µs	
115200	1.63 µs	4.00 µs	

Note 1: The pulse width limiter on the TXIR pin saves system current for this baud rate.

2: This TXIR pulse width time is a design target and is not tested. Actual times may be greater than or less than this value.

FIGURE 2-9: MCP2122 AT 115200 BAUD WAVEFORM

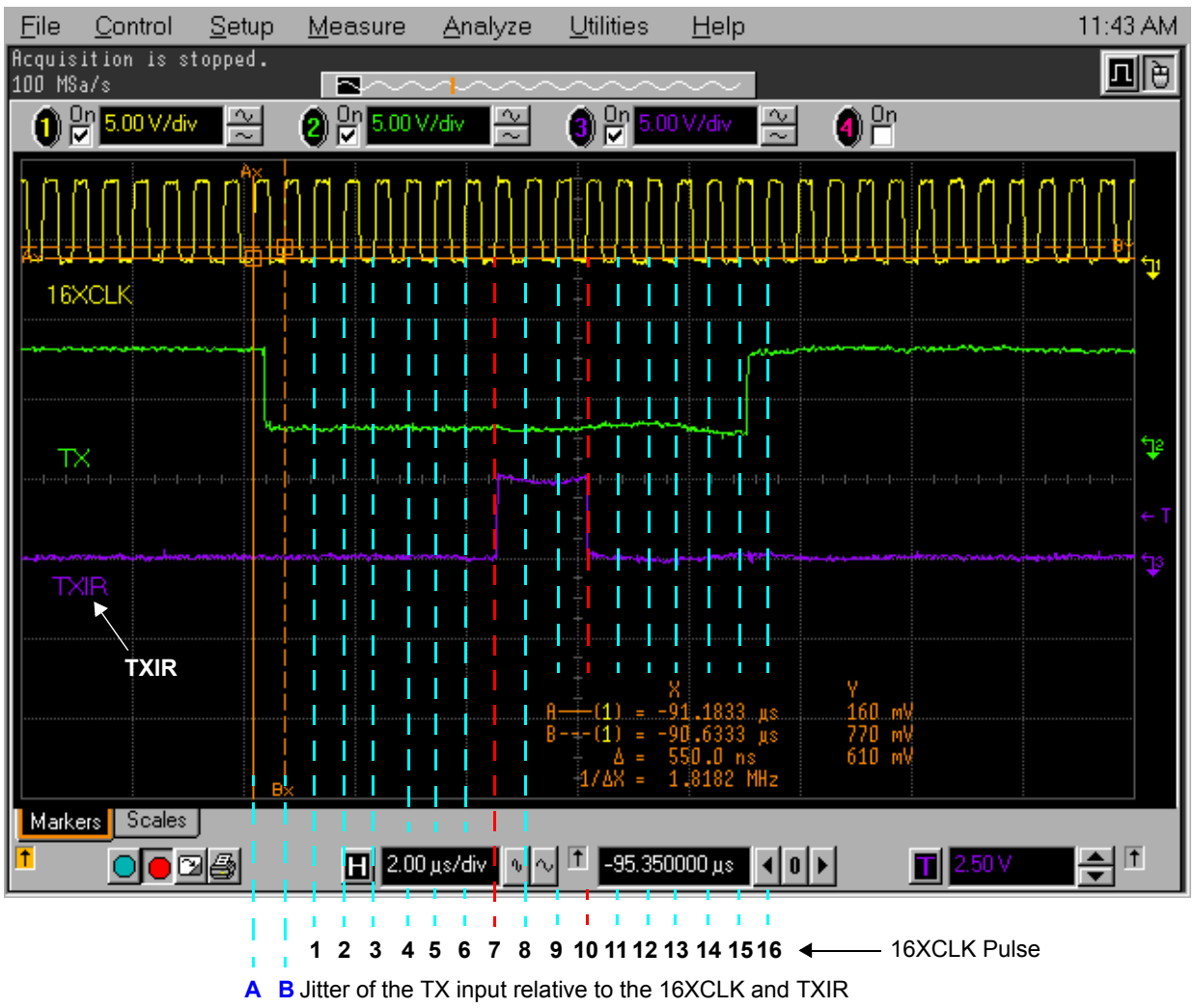

FIGURE 2-10: MCP2122 AT 9600 BAUD WAVEFORM

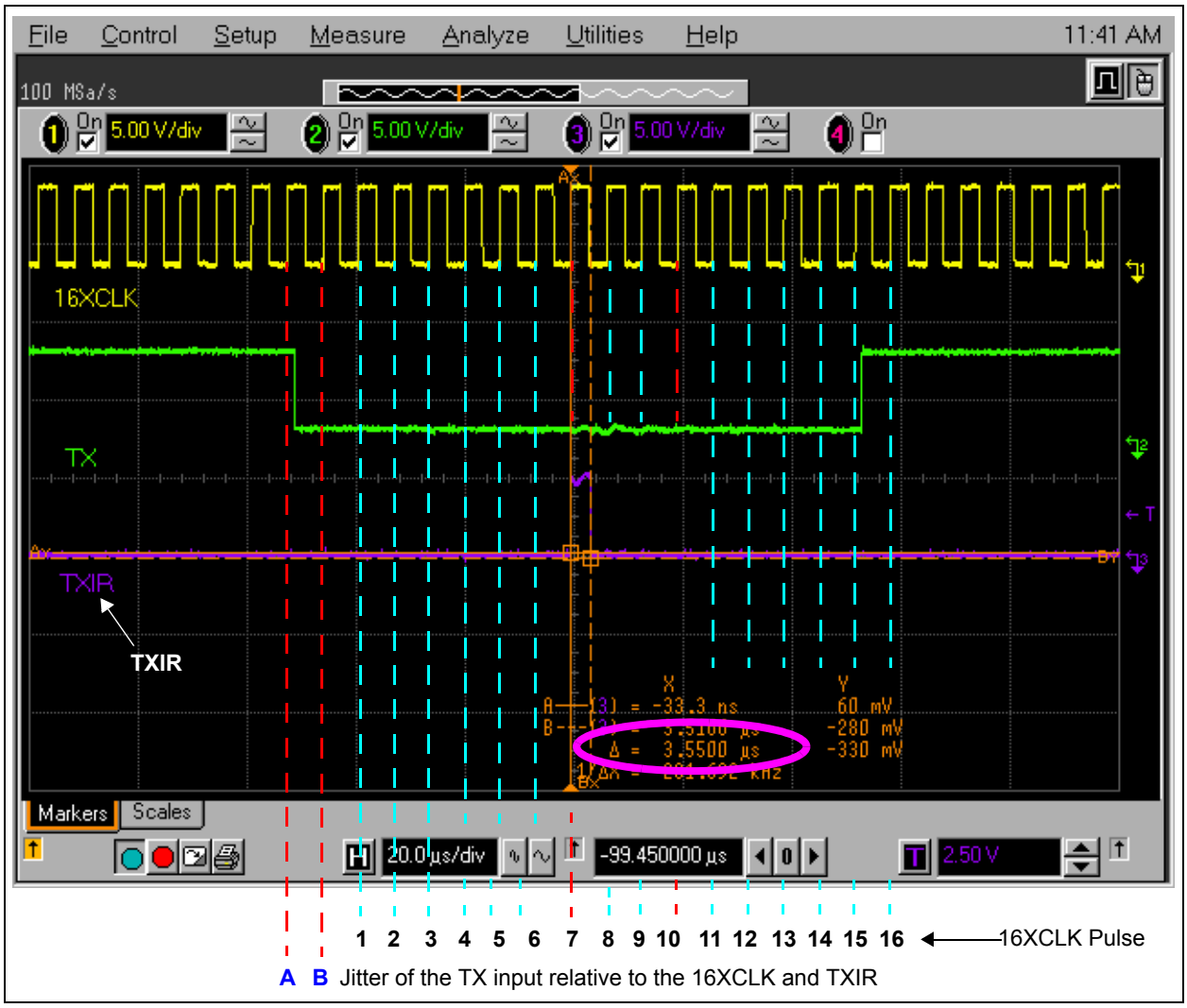

2.6 Host UART Interface

The UART interface is used to communicate with the host controller. Though a UART is capable of a full-duplex interface, the direct coupling to the IR encoder/decoder allows only half-duplex operation (since the IR side is either receiving or transmitting and not both at the same time). This means that the system can not transmit and receive at the same time.

2.6.1 TRANSMITTING

When the controller sends serial data to the MCP2122, the baud rates are required to match.

There will be some jitter on the detection of the high to low edge of the start bit. This jitter will affect the placement of the encoded start bit. All subsequent bits will be 16 BITCLK times later.

While RXIR is receiving data (low pulse), the TXIR pin is disabled from transmitting.

2.6.2 RECEIVING

When the controller receives serial data from the MCP2122, the baud rates are required to match.

There will be some jitter on the detection of the high-to-low edge of the Start bit. This jitter will affect the placement of the decoded Start bit. All subsequent bits will be 16 BITCLK times later.

The TXIR pin is disabled when data is being received (low pulse) on the RXIR pin.

2.7 IR Interface

The IR interface is used to communicate with the optical receiver circuitry. The IR interface is either transmitting data or receiving data (half-duplex).

2.8 Encoding/Decoding Jitter and Offset

Figure 2-11 shows the jitter on the RXIR and TX pins, and the offset on the RX pin and the TXIR pin.

Jitter is the possible variation of the desired edge. Figure 2-9 and Figure 2-10 show the jitter of the TX pin (range is indicated by red dashed lines).

Offset is the propagation delay of the input signal (RXIR or TX) to the output signal (RX or TXIR). Figure 2-9 and Figure 2-10 show the offset of the TXIR pin from the 16XCLK signal that starts the bit time.

2.9 Minimizing Power

The device can be placed in a Low Power mode by forcing the RESET pin low. This disables the internal state machine. To ensure that the lowest power consumption is obtained, ensure that the 16XCLK pin is not active and that the other input pins (TX and RXIR) are at a logic-high or logic-low level.

2.9.1 RETURNING TO OPERATION

When returning to normal operation, the RESET pin must be forced high and the 16XCLK signal should be operating. Time should be given to ensure that the 16XCLK is stabilized at the desired frequency before data is allowed to be transmitted or received.

FIGURE 2-11: EFFECTS OF JITTER AND OFFSET

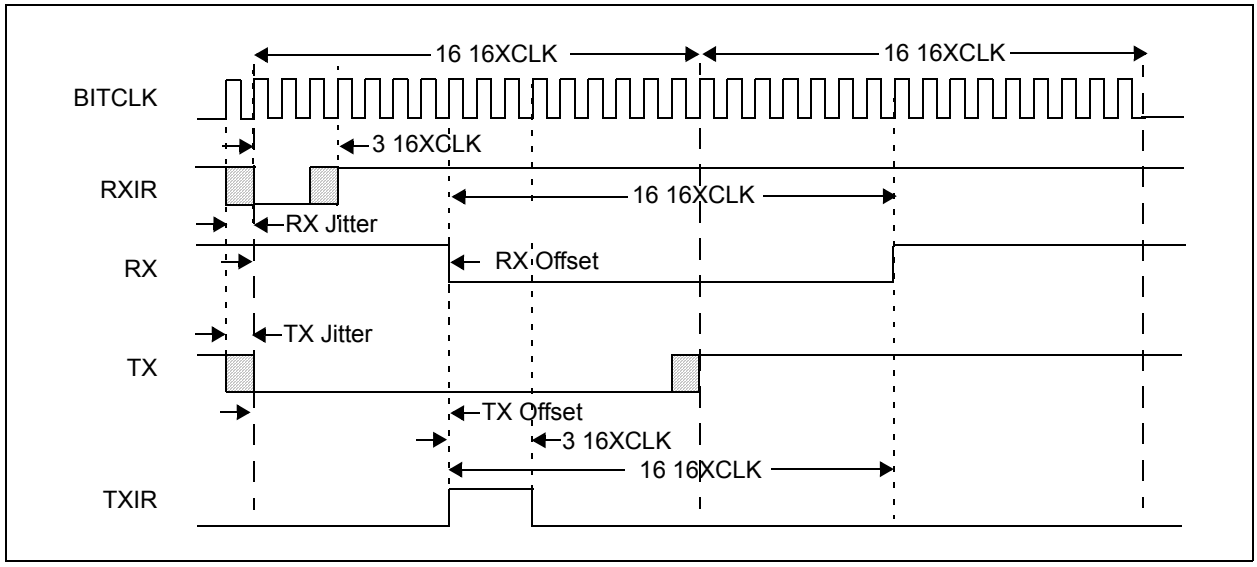

3.0 DEVELOPMENT TOOLS

There are currently no development tools for the MCP2122. A demo board is scheduled to be available soon.

4.0 ELECTRICAL CHARACTERISTICS

Absolute Maximum Ratings†

Ambient Temperature under bias ..... –40°C to +125°C

Storage Temperature ..... –65°C to +150°C

Voltage on V_{DD} with respect to V_{SS} ..... –0.3V to +6.5V

Voltage on $\overline{RESET}$ with respect to V_{SS} ..... –0.3V to +14V

Voltage on all other pins with respect to V_{SS} ..... –0.3V to (V_{DD} + 0.3V)

Total Power Dissipation (1) ..... 800 mW

Max. Current out of V_{SS} pin ..... 500 mA

Max. Current into V_{DD} pin ..... 500 mA

Input Clamp Current, I_{IK} (VI < 0 or VI > V_{DD}) ..... ±20 mA

Output Clamp Current, I_{OK} (V0 < 0 or V0 > V_{DD}) ..... ±20 mA

Max. Output Current sunk by any Output pin ..... 25 mA

Max. Output Current sourced by any Output pin ..... 25 mA

Note 1: Power Dissipation is calculated as follows:
$P_{DIS} = V_{DD} \times \{I_{DD} - \sum I_{OH}\} + \sum \{(V_{DD}-V_{OH}) \times I_{OH}\} + \sum(V_{OL} \times I_{OL})$

†NOTICE: Stresses above those listed under "Maximum Ratings" may cause permanent damage to the device. This is a stress rating only and functional operation of the device at those or any other conditions above those indicated in the operation listings of this specification is not implied. Exposure to maximum rating conditions for extended periods may affect device reliability.

FIGURE 4-1: VOLTAGE-FREQUENCY (16XCLK) GRAPH, -40°C ≤ TA ≤ +125°C

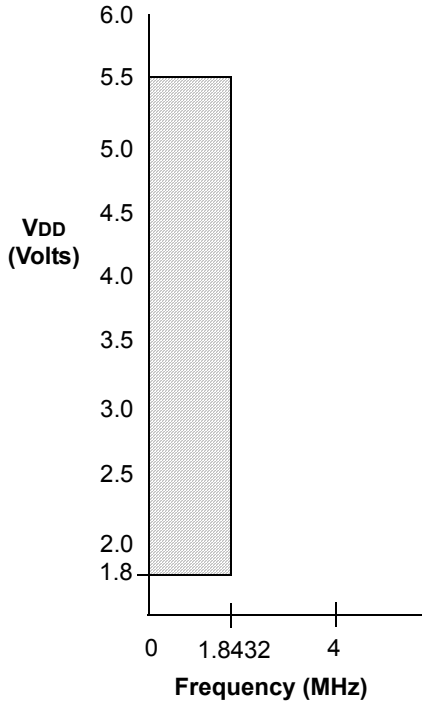

4.1 DC Characteristics

DC Characteristics			Standard Operating Conditions (unless otherwise specified) Operating Temperature: –40°C ≤ TA ≤ +125°C (Extended)				
Param. No.	**Sym**	**Characteristic**	**Min**	**Typ (1)**	**Max**	**Units**	**Conditions**
D001	VDD	Supply Voltage	1.8	—	5.5	V	See **Figure 4-1**
D010	IDD	Supply Current (2)	—	0.1	1	mA	FOSC = 1.8432 MHz, VDD = 5.5V (TX = H, RXIR = H)
							Transmitter (TX = L, RXIR = H)
			—	—	300	µA	FOSC = 1.8432 MHz, VDD = 1.8V (4)
			—	—	1	mA	FOSC = 1.8432 MHz, VDD = 5.5V
							Receiver (RXIR = L, TX = H)
			—	—	500	µA	FOSC = 1.8432 MHz, VDD = 1.8V (4)
			—	—	2	mA	FOSC = 1.8432 MHz, VDD = 5.5V
D020	IPD	Device Disabled Current (3)	—	—	2	µA	VDD = 1.8V (4)
			—	—	4	µA	VDD = 5.5V

Note 1: Data in the Typical ("Typ") column is based on characterization results at +25°C. This data is for design guidance only and is not tested.

2: The supply current is mainly a function of the operating voltage and frequency. Pin loading, pin rate and temperature have an impact on the current consumption.

a)The test conditions for all IDD measurements are:
16XCLK = external square wave, from rail-to-rail; TX = VSS, RXIR = VSS, $\overline{\text{RESET}}$ = VDD.

3: The device disable current is mainly a function of the operating voltage. Temperature also has an impact on the current consumption. When the device is disabled (RESET = VSS). The test conditions for all IDD measurements are:
16XCLK = external square wave, from rail-to-rail; TX = VSS, RXIR = VDD, $\overline{\text{RESET}}$ = VSS; The output pins are driving a high or low level into infinite impedance.

4: These parameters (shaded) are characterized but are not tested. These values should be used for design guidance only.

DC Characteristics (Continued)

DC CHARACTERISTICS			Standard Operating Conditions (unless otherwise specified) Operating temperature –40°C ≤ TA ≤ +125°C (extended) Operating voltage VDD range as described in DC spec, **Section 4.1 "DC Characteristics"**.				
Param No.	**Sym**	**Characteristic**	**Min**	**Typ (1)**	**Max**	**Units**	**Conditions**
	VIL	**Input Low Voltage**					
		Input pins					
D031		TX, RXIR	Vss	—	0.2 VDD	V	
D032		$\overline{\text{RESET}}$	Vss	—	0.2 VDD	V	
D033		16XCLK	Vss	—	0.2 VDD	V	
	VIH	**Input High Voltage**					
		Input pins		—			
D041		TX, RXIR	0.8 VDD	—	VDD	V	
D042		$\overline{\text{RESET}}$	0.8 VDD	—	VDD	V	
D043		16XCLK	0.8 VDD	—	VDD	V	
	IIL	**Input Leakage Current (2, 3)**					
D060A		TX, and 16XCLK	—	—	±1	μA	VSS ≤ VPIN ≤ VDD, Pin at high-impedance
D061		$\overline{\text{RESET}}$	—	—	±1	μA	VSS ≤ VPIN ≤ VDD
D060B	IIH	RXIR	—	—	±1	μA	VDD = 5.5V, VRXIR = VDD

Note 1: Data in the Typical ("Typ") column is based on characterization results at +25°C. This data is for design guidance only and is not tested.

2: The leakage current on the $\overline{\text{RESET}}$ pin is strongly dependent on the applied voltage level. The specified levels represent normal operating conditions. Higher leakage current may be measured at different input voltages.

3: Negative current is defined as coming out of the pin.

DC Characteristics (Continued)

DC CHARACTERISTICS			Standard Operating Conditions (unless otherwise specified) Operating temperature: –40°C ≤ TA ≤ +125°C (Extended) Operating voltage VDD range as described in DC spec, **Section 4.1 "DC Characteristics"**.				
Param No.	**Sym**	**Characteristic**	**Min**	**Typ (1)**	**Max**	**Units**	**Conditions**
	VOL	**Output Low Voltage**					
D080B		RX	—	—	0.6	V	IOL = 2 mA, VDD = 1.8V
D081		TXIR	—	—	0.6	V	IOL = 2 mA, VDD = 1.8V
	VOH	**Output High Voltage**					
D090B		RX (2)	VDD – 0.7	—	—	V	IOH = -0.8 mA, VDD = 1.8V
D091		TXIR (2)	VDD – 0.7	—	—	V	IOH = -0.8 mA, VDD = 1.8V
		Capacitive Loading Specs on Output Pins					
D101A	COUT	All Output pins	—	—	50	pF	
D101B	CIN	All Input pins	—	7	—	pF	TA = +25°C, FC = 1.0 MHz

Note 1: Data in the Typical ("Typ") column is based on characterization results at +25°C. This data is for design guidance only and is not tested.

2: Negative current is defined as coming out of the pin.

4.2 Timing Parameter Symbology and Load Conditions

The timing parameter symbols have been created following one of the following formats:

4.2.1 TIMING CONDITIONS

The temperature and voltages specified in Table 4-2 apply to all timing specifications unless otherwise noted. Figure 4-2 specifies the load conditions for the timing specifications.

TABLE 4-1: SYMBOLOGY

1. TppS2ppS		2. TppS	
T			
F	Frequency	T	Time
E	Error		
Lowercase letters (pp) and their meanings:			
pp			
io	Input or Output pin	xclk	Oscillator
rx	Receive	tx	Transmit
bitclk	RX/TX BITCLK	RST	Reset
Uppercase letters and their meanings:			
S			
F	Fall	P	Period
H	High	R	Rise
I	Invalid (Hi-impedance)	V	Valid
L	Low	Z	High-impedance

TABLE 4-2: AC TEMPERATURE AND VOLTAGE SPECIFICATIONS

AC CHARACTERISTICS	Standard Operating Conditions (unless otherwise stated) Operating temperature: –40°C ≤ TA ≤ +125°C (Extended) Operating voltage VDD range as described in DC spec, **Section 4.1 "DC Characteristics"**.

FIGURE 4-2: LOAD CONDITIONS FOR DEVICE TIMING SPECIFICATIONS

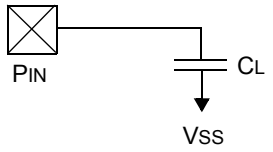

CL = 50 pF for all output pins
7 pF (typical) for all input pins

4.3 Timing Diagrams and Specifications

FIGURE 4-3: EXTERNAL CLOCK TIMING

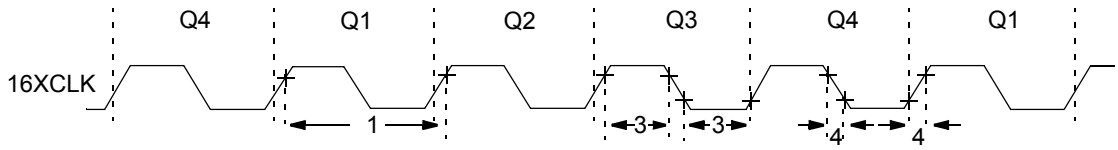

TABLE 4-3: EXTERNAL CLOCK TIMING REQUIREMENTS

AC Characteristics			Standard Operating Conditions (unless otherwise specified) Operating Temperature: –40°C ≤ TA ≤ +125°C (Extended) Operating Voltage VDD range is described in **Section 4.1 "DC Characteristics"**				
Param. No.	**Sym**	**Characteristic**	**Min**	**Typ(1)**	**Max**	**Units**	**Conditions**
1	TXCLK	External 16XCLK Period (2, 3)	542.5	—	—	ns	
1A	FXCLK	External 16XCLK Frequency (2, 3)	DC	—	1.8432	MHz	
1C	EXCLK	Clock Error (4, 5)	—	—	±2	%	**Note 5**
3	TXCLKL, TXCLKH	Clock in (16XCLK) Low or High Time	50	—	—	ns	
4	TXCLKR, TXCLKF	Clock in (16XCLK) Rise or Fall Time (5)	—	—	7.5	ns	**Note 5**

Note 1: Data in the Typical ("Typ") column is at 5V, +25°C, unless otherwise stated. These parameters are for design guidance only and are not tested.

2: All specified values are based on characterization data for that particular oscillator type under standard operating conditions with the device executing code. Exceeding these specified limits may result in an unstable oscillator operation and/or higher than expected current consumption.
When an external clock input is used, the "max" cycle time limit is "DC" (no clock) for all devices.

3: A duty cycle of no more than 60/40 (High Time/Low Time or Low Time/High Time) is recommended for external clock inputs.

4: This is the clock error from the desired clock frequency. The total system clock error includes the error from the transmitter and the error of receiver (from the desired clock frequency). If the transmitter is 2% fast from the target frequency and the receiver is 2% slow from the target frequency, then the total error is 4%.

5: These parameters (shaded) are characterized but are not tested. These values should be used for design guidance only.

FIGURE 4-4: I/O WAVEFORM

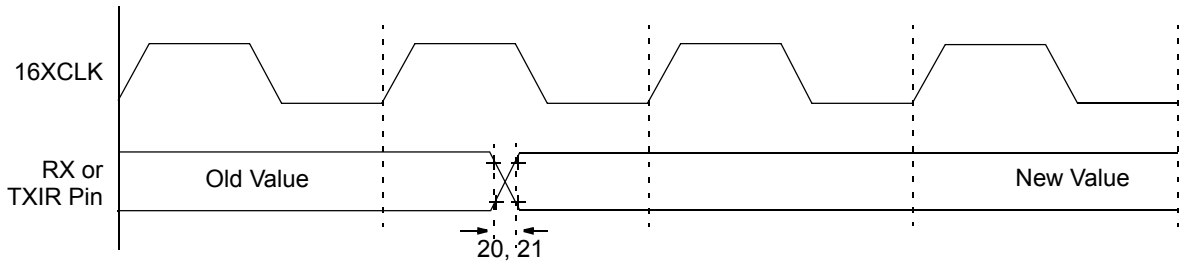

Note: Refer to Figure 4-2 for load conditions.

TABLE 4-4: I/O TIMING REQUIREMENTS

AC Characteristics			Standard Operating Conditions (unless otherwise specified) Operating Temperature: –40°C ≤ TA ≤ +125°C (Extended) Operating Voltage VDD range is described in **Section 4.1 "DC Characteristics"**				
Param. No.	**Sym**	**Characteristic**	**Min**	**Typ (1)**	**Max**	**Units**	**Conditions**
20A	ToR	RX pin rise time (2, 3)	—	10	25	ns	VDD ≥ 2.7V **(Note 3)**
20B			—	10	60	ns	VDD = 1.8V **(Note 3)**
20C		TXIR pin rise time (2, 3)	—	10	25	ns	VDD ≥ 2.7V **(Note 3)**
20D			—	10	60	ns	VDD = 1.8V **(Note 3)**
21A	ToF	RX pin fall time (2, 3)	—	10	35	ns	**Note 3**
21C		TXIR pin fall time (2, 3)	—	10	25	ns	**Note 3**

Note 1: Data in the Typical ("Typ") column is at 5V, +25°C unless otherwise stated. These parameters are for design guidance only and are not tested.

2: See Figure 4-2 for loading conditions.

3: These parameters (shaded) are characterized but are not tested. These values should be used for design guidance only.

FIGURE 4-5: $\overline{\text{RESET}}$ AND DEVICE RESET TIMER TIMING

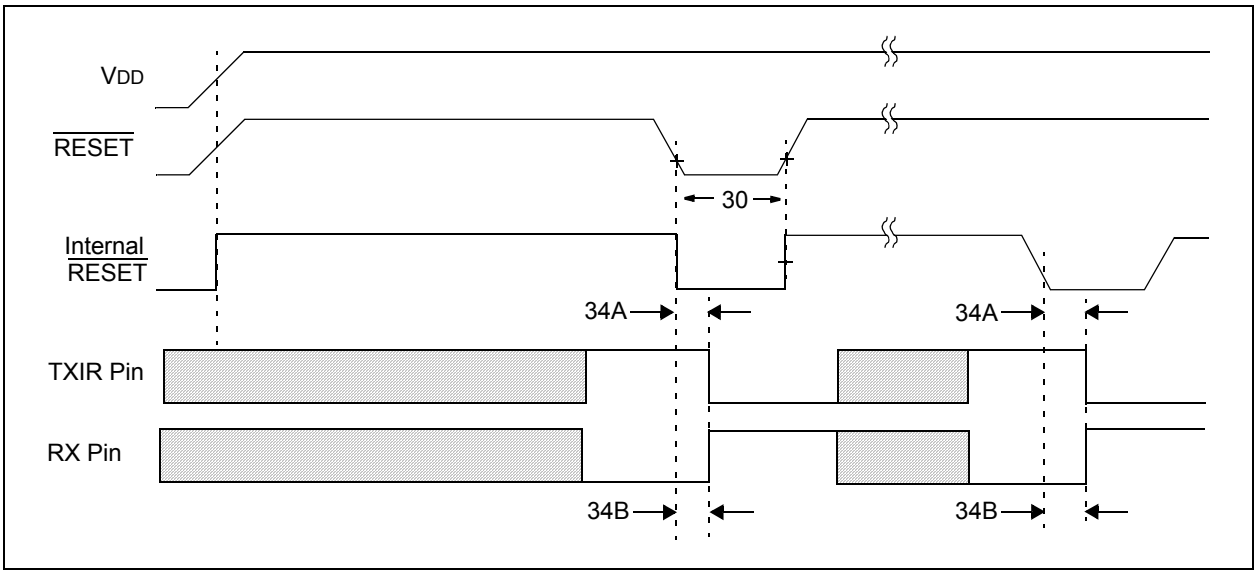

TABLE 4-5: $\overline{\text{RESET}}$ AND DEVICE RESET TIMER REQUIREMENTS

AC Characteristics			Standard Operating Conditions (unless otherwise specified) Operating Temperature: –40°C ≤ TA ≤ +125°C (Extended) Operating Voltage VDD range is described in **Section 4.1 "DC Characteristics"**.				
Param. No.	**Sym**	**Characteristic**	**Min**	**Typ (1)**	**Max**	**Units**	**Conditions**
30	TRSTL	$\overline{\text{RESET}}$ Pulse Width (low)	2000	—	—	ns	VDD = 5.0 V
34A	TOD	Default output state of TXIR pin from $\overline{\text{RESET}}$ Low	—	—	2	µs	
34B	TOD	Default output state of RX pins from $\overline{\text{RESET}}$ Low	—	—	2	µs	

Note 1: Data in the Typical ("Typ") column is at 5V, +25°C unless otherwise stated. These parameters are for design guidance only and are not tested.

FIGURE 4-6: TX AND TXIR WAVEFORMS

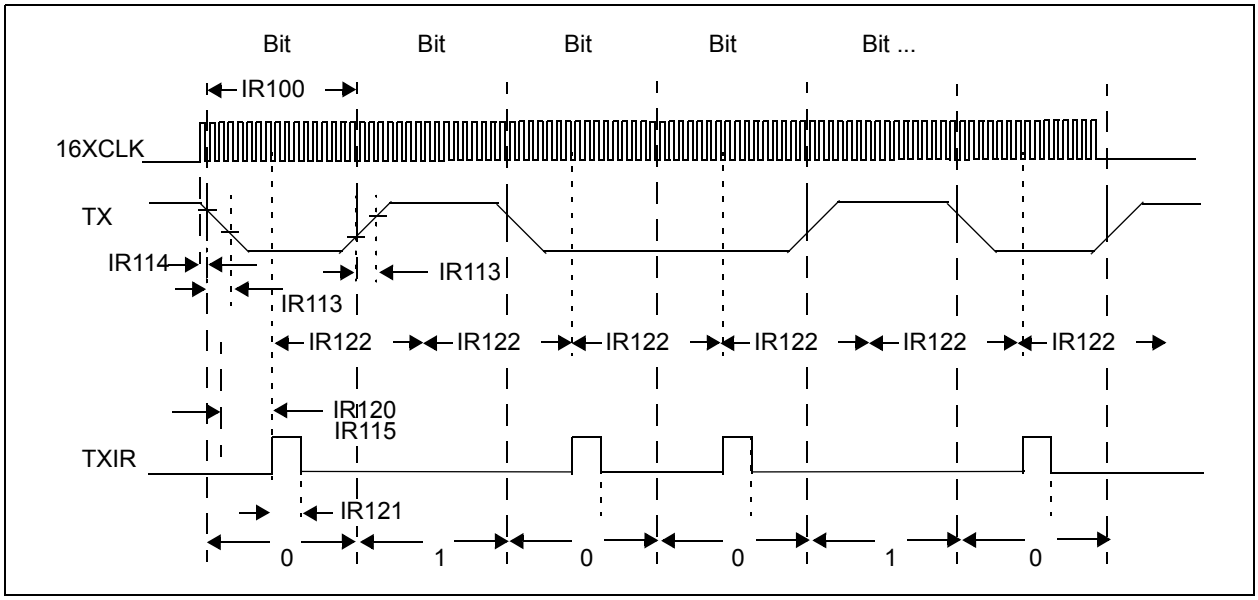

TABLE 4-6: TX AND TXIR REQUIREMENTS

AC Characteristics			Standard Operating Conditions (unless otherwise specified) Operating Temperature: –40°C ≤ TA ≤ +125°C (Extended) Operating Voltage VDD range is described in **Section 4.1 "DC Characteristics"**.				
Param. No.	**Sym**	**Characteristic**	**Min**	**Typ (1)**	**Max**	**Units**	**Conditions**
IR100A	TTXBIT	Transmit Baud Rate	—	16	—	TXCLK	
IR100B	TTXIRBIT	Transmit Baud Rate	16	—	16	TXCLK	
IR102A	ETXBIT	Host UART TX Error	—	—	± 2	%	**Note 2**, **3**
IR102B	ETXIRBIT	TXIR Error from 16XCLK	—	0	—	%	**Note 2**, **4**
IR113	TTXRF	TX pin rise time and fall time	—	—	25	ns	**Note 2**
IR114	TTXPDIRJ	16XCLK to TX jitter	—	—	1	TXCLK	**Note 2**
IR120	TTXL2TXIRH	TX falling edge (↓) to TXIR rising edge (↑) (1)	7	—	8	TXCLK	
IR121A	TTXIRPW	TXIR pulse width	3	—	3	TXCLK	At 115200 baud
IR121B			1.41	3.5	5	µs	At 9600 baud **(Note 5)**
IR122	TTXIRP	TXIR bit period (1)	—	16	—	TXCLK	
IR123	TTXIRRF	TXIR pin rise time and fall time	—	—	10	ns	50 pF load **(Note 2)**

Note 1: Data in the Typical ("Typ") column is at 5V, +25°C, unless otherwise stated. These parameters are for design guidance only and are not tested.

2: These parameters (shaded) are characterized but are not tested. These values should be used for design guidance only.

3: The TX pin operation may be asynchronous to the 16XCLK pin. This is the error from the desired baud rate for the system.

4: The TXIR pin operation is synchronous to the 16XCLK pin. Any error present on the 16XCLK pin (Parameter 1C) will be refelected on the TXIR pin.

5: This specification is not tested. This value is from the design target.

FIGURE 4-7: 16XCLK AND THE TX AND TXIR WAVEFORMS

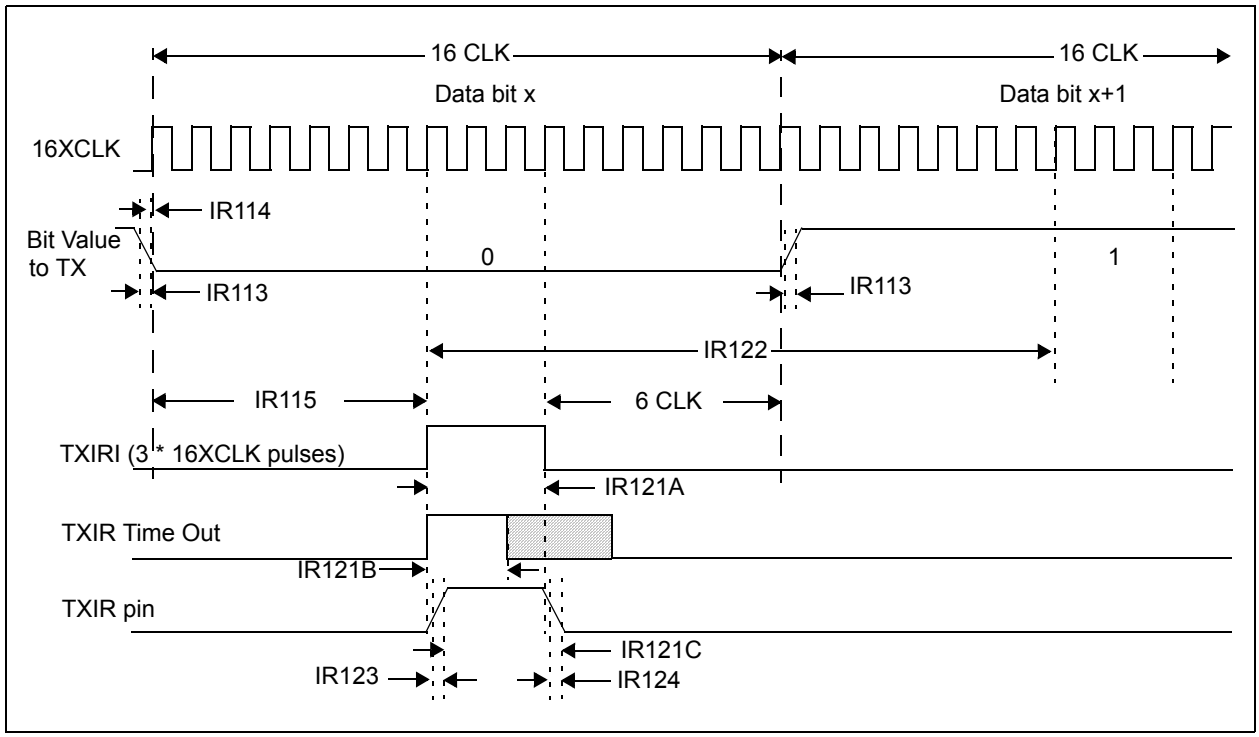

TABLE 4-7: TX AND TXIR REQUIREMENTS

AC Characteristics			Standard Operating Conditions (unless otherwise specified) Operating Temperature: –40°C ≤ TA ≤ +125°C (Extended) Operating Voltage VDD range is described in **Section 4.1 "DC Characteristics"**.				
Param. No.	**Symbol**	**Characteristic**	**Min**	**Typ (1)**	**Max**	**Units**	**Conditions**
IR113	TTXRF	TX pin rise time and fall time	—	—	25	ns	**Note 2**
IR114	TTXJ	TX to 16XCLK jitter	—	—	1	TXCLK	**Note 2**
IR120	TTXL2TXIRH	TX falling edge (↓) to TXIR rising edge (↑) **(1)**	7	—	8	TXCLK	
	TTXIRPW	TXIR pulse width	Smaller of		Smaller of		
IR121A			3	—	3	TXCLK	At 115200 baud
IR121B			1.41	3.5	5	µs	At 9600 baud **(Note 3)**
IR122	TTXIRP	TXIR bit period	—	16	—	TXCLK	
20C	TTXIRR	TXIR pin rise time	—	10	25	ns	VDD ≥ 2.7V **(Note 2)**
20D			—	10	60	ns	VDD = 1.8V **(Note 2)**
21C	TTXIRF	TXIR pin fall time	—	10	25	ns	**Note 2**

Note 1: Data in the Typical ("Typ") column is at 5V, +25°C, unless otherwise stated. These parameters are for design guidance only and are not tested.

2: These parameters (shaded) are characterized but are not tested. These values should be used for design guidance only.

3: This specification is not tested. This value is from the design target

FIGURE 4-8: RXIR AND RX WAVEFORMS

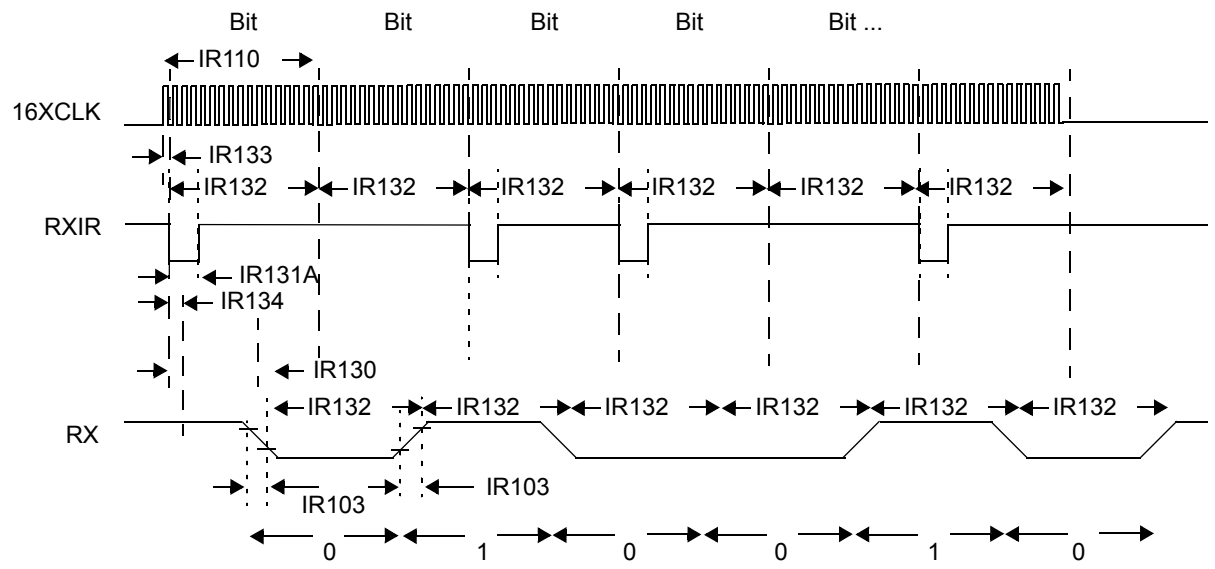

Note: Refer to Figure 4-2 for load conditions.

TABLE 4-8: RXIR REQUIREMENTS

AC Characteristics			Standard Operating Conditions (unless otherwise specified) Operating Temperature: –40°C ≤ TA ≤ +125°C (Extended) Operating Voltage VDD range is described in **Section 4.1 "DC Characteristics"**.				
Param. No.	**Sym**	**Characteristic**	**Min**	**Typ (1)**	**Max**	**Units**	**Conditions**
IR101A	ERXIRBIT	RXIR Error	—	—	± 2	%	**Note 2, 3**
IR101B	ERXBIT	Host UART RX Error	—	0	—	%	**Note 2, 4**
IR103	TTXRF	RX pin rise time and fall time	—	—	25	ns	
IR110	TRXBIT	Receive (RX pin) Bit Rate	16	—	16	TXCLK	
IR130	TRXIRL2RXH	RXIR Low AND 16XCLK edge (↓ or ↑) to RX falling edge (↓)	—	4	—	TXCLK	At 115,200 baud
			—	3	—	TXCLK	At 9600 baud
IR131A	TRXIRPW	RXIR pulse width	1.41	—	3 TXCLK	µs	
IR132	TRXIRP	RXIR bit period (1)	—	16	—	TXCLK	
IR133	TRXIRJ	16XCLK to RXIR jitter	—	—	1	TXCLK	**Note 2**
IR134	TRXSKW	16XCLK to RX skew	—	—	2.5	µs	
IR135	TRXPDFIL	RXIR Filter	0.7	—	1.4	µs	**Note 5**

Note 1: Data in the Typical ("Typ") column is at 5V, +25°C, unless otherwise stated. These parameters are for design guidance only and are not tested.

2: These parameters (shaded) are characterized but are not tested. These values should be used for design guidance only.

3: The RXIR pin operation is asynchronous to the 16XCLK pin. This is the error from the desired baud rate for the system.

4: The RX pin operation is synchronous to the 16XCLK pin. Any error present on the 16XCLK pin (Parameter 1C) will be refelected on the RX pin.

5: The minimum specification ensures that ALL pulses less then this pulse width are rejected, the maximum specification ensures that ALL pulses greater than this pulse width are never rejected, and pulse widths between these may or may not be rejected.

5.0 DC AND AC CHARACTERISTICS GRAPHS AND TABLES

The graphs and tables are not available at this time

NOTES:

6.0 PACKAGING INFORMATION

6.1 Package Marking Information

8-Lead PDIP (300 mil)

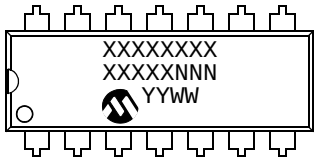

Example:

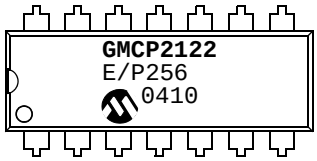

8-Lead SOIC (150 mil)

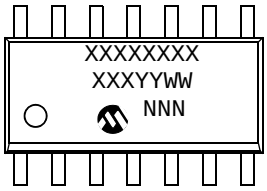

Example:

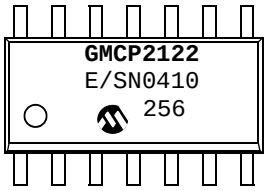

Legend:	XX...X	Customer specific information*
	Y	Year code (last digit of calendar year)
	YY	Year code (last 2 digits of calendar year)
	WW	Week code (week of January 1 is week ‘01’)
	NNN	Alphanumeric traceability code

Note: In the event the full Microchip part number cannot be marked on one line, it will be carried over to the next line thus limiting the number of available characters for customer specific information.

* Standard device marking consists of Microchip part number, year code, week code, and traceability code..

8-Lead Plastic Dual In-line (P) – 300 mil Body (PDIP)

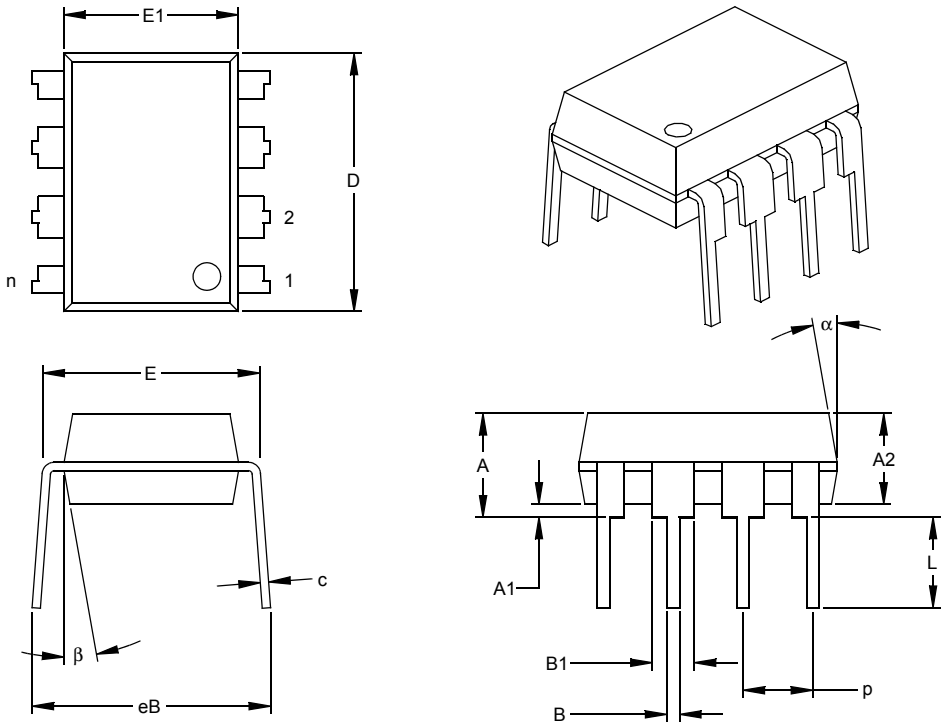

Units		INCHES*			MILLIMETERS		
Dimension Limits		MIN	NOM	MAX	MIN	NOM	MAX
Number of Pins	n		8			8	
Pitch	p		.100			2.54	
Top to Seating Plane	A	.140	.155	.170	3.56	3.94	4.32
Molded Package Thickness	A2	.115	.130	.145	2.92	3.30	3.68
Base to Seating Plane	A1	.015			0.38		
Shoulder to Shoulder Width	E	.300	.313	.325	7.62	7.94	8.26
Molded Package Width	E1	.240	.250	.260	6.10	6.35	6.60
Overall Length	D	.360	.373	.385	9.14	9.46	9.78
Tip to Seating Plane	L	.125	.130	.135	3.18	3.30	3.43
Lead Thickness	c	.008	.012	.015	0.20	0.29	0.38
Upper Lead Width	B1	.045	.058	.070	1.14	1.46	1.78
Lower Lead Width	B	.014	.018	.022	0.36	0.46	0.56
Overall Row Spacing §	eB	.310	.370	.430	7.87	9.40	10.92
Mold Draft Angle Top	α	5	10	15	5	10	15
Mold Draft Angle Bottom	β	5	10	15	5	10	15

* Controlling Parameter
§ Significant Characteristic

Notes:
Dimensions D and E1 do not include mold flash or protrusions. Mold flash or protrusions shall not exceed .010” (0.254mm) per side.
JEDEC Equivalent: MS-001
Drawing No. C04-018

8-Lead Plastic Small Outline (SN) – Narrow, 150 mil Body (SOIC)

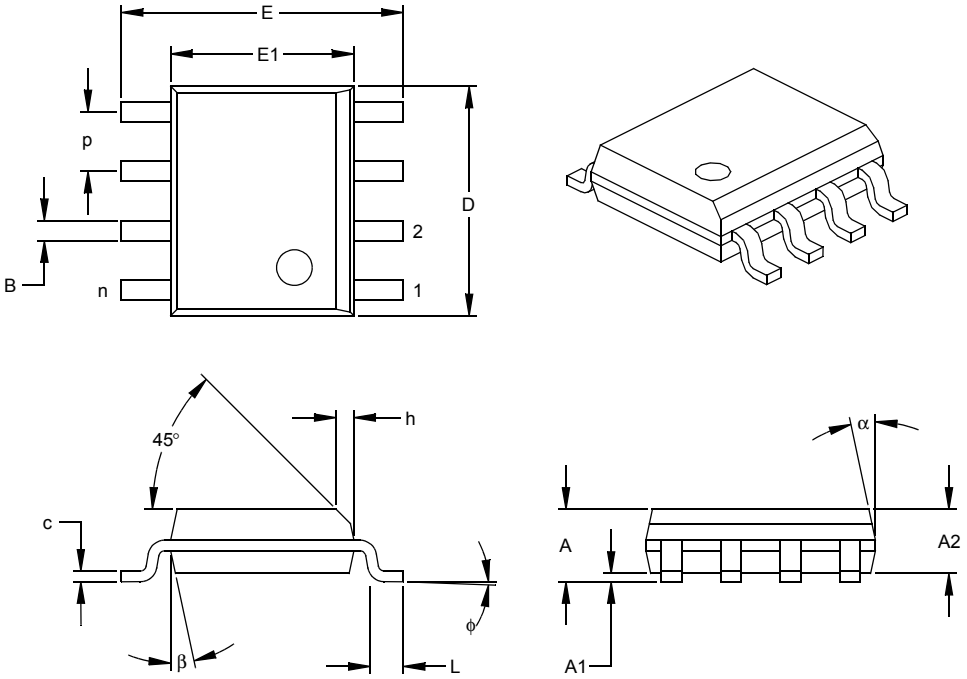

Units		INCHES*			MILLIMETERS		
Dimension Limits		MIN	NOM	MAX	MIN	NOM	MAX
Number of Pins	n		8			8	
Pitch	p		.050			1.27	
Overall Height	A	.053	.061	.069	1.35	1.55	1.75
Molded Package Thickness	A2	.052	.056	.061	1.32	1.42	1.55
Standoff §	A1	.004	.007	.010	0.10	0.18	0.25
Overall Width	E	.228	.237	.244	5.79	6.02	6.20
Molded Package Width	E1	.146	.154	.157	3.71	3.91	3.99
Overall Length	D	.189	.193	.197	4.80	4.90	5.00
Chamfer Distance	h	.010	.015	.020	0.25	0.38	0.51
Foot Length	L	.019	.025	.030	0.48	0.62	0.76
Foot Angle	φ	0	4	8	0	4	8
Lead Thickness	c	.008	.009	.010	0.20	0.23	0.25
Lead Width	B	.013	.017	.020	0.33	0.42	0.51
Mold Draft Angle Top	α	0	12	15	0	12	15
Mold Draft Angle Bottom	β	0	12	15	0	12	15

* Controlling Parameter
§ Significant Characteristic

Notes:
Dimensions D and E1 do not include mold flash or protrusions. Mold flash or protrusions shall not exceed .010” (0.254mm) per side.
JEDEC Equivalent: MS-012
Drawing No. C04-057

NOTES:

PRODUCT IDENTIFICATION SYSTEM

To order or obtain information, e.g., on pricing or delivery, refer to the factory or the listed sales office.

PART NO.	X	/XX	X
Device	Temperature Range	Package	Lead Finish

Device	MCP2122:	Infrared Encoder/Decoder	
Temperature Range	E	=	-40°C to +125°C
Package	P	=	Plastic DIP (300 mil, Body), 8-lead
	SN	=	Plastic SOIC (150 mil, Body), 8-lead
Lead Finish	G	=	Matte Tin (Pure Sn)

Examples:

a) MCP2122-E/PG: Extended Temperature, PDIP package, Pb-free

b) MCP2122-E/SNG: Extended Temperature, SOIC package, Pb-free

c) MCP2122T-E/SNG: Tape and Reel, Extended Temperature, SOIC package. Pb-free

Sales and Support

Data Sheets

Products supported by a preliminary Data Sheet may have an errata sheet describing minor operational differences and recommended workarounds. To determine if an errata sheet exists for a particular device, please contact one of the following:

1. Your local Microchip sales office
2. The Microchip Corporate Literature Center U.S. FAX: (480) 792-7277
3. The Microchip Worldwide Site (www.microchip.com)

Please specify which device, revision of silicon and Data Sheet (include Literature #) you are using.

Customer Notification System

Register on our web site (www.microchip.com/cn) to receive the most current information on our products.

NOTES:

Note the following details of the code protection feature on Microchip devices:

- Microchip products meet the specification contained in their particular Microchip Data Sheet.
- Microchip believes that its family of products is one of the most secure families of its kind on the market today, when used in the intended manner and under normal conditions.
- There are dishonest and possibly illegal methods used to breach the code protection feature. All of these methods, to our knowledge, require using the Microchip products in a manner outside the operating specifications contained in Microchip's Data Sheets. Most likely, the person doing so is engaged in theft of intellectual property.
- Microchip is willing to work with the customer who is concerned about the integrity of their code.
- Neither Microchip nor any other semiconductor manufacturer can guarantee the security of their code. Code protection does not mean that we are guaranteeing the product as "unbreakable."

Code protection is constantly evolving. We at Microchip are committed to continuously improving the code protection features of our products. Attempts to break Microchip's code protection feature may be a violation of the Digital Millennium Copyright Act. If such acts allow unauthorized access to your software or other copyrighted work, you may have a right to sue for relief under that Act.

QUALITY MANAGEMENT SYSTEM
CERTIFIED BY DNV
ISO/TS 16949:2002

Microchip received ISO/TS-16949:2002 quality system certification for its worldwide headquarters, design and wafer fabrication facilities in Chandler and Tempe, Arizona and Mountain View, California in October 2003. The Company's quality system processes and procedures are for its PICmicro® 8-bit MCUs, KEELOQ® code hopping devices, Serial EEPROMs, microperipherals, nonvolatile memory and analog products. In addition, Microchip's quality system for the design and manufacture of development systems is ISO 9001:2000 certified.

WORLDWIDE SALES AND SERVICE

AMERICAS

Corporate Office
2355 West Chandler Blvd.
Chandler, AZ 85224-6199
Tel: 480-792-7200
Fax: 480-792-7277
Technical Support: 480-792-7627
Web Address: www.microchip.com

Atlanta
3780 Mansell Road, Suite 130
Alpharetta, GA 30022
Tel: 770-640-0034
Fax: 770-640-0307

Boston
2 Lan Drive, Suite 120
Westford, MA 01886
Tel: 978-692-3848
Fax: 978-692-3821

Chicago
333 Pierce Road, Suite 180
Itasca, IL 60143
Tel: 630-285-0071
Fax: 630-285-0075

Dallas
4570 Westgrove Drive, Suite 160
Addison, TX 75001
Tel: 972-818-7423
Fax: 972-818-2924

Detroit
Tri-Atria Office Building
32255 Northwestern Highway, Suite 190
Farmington Hills, MI 48334
Tel: 248-538-2250
Fax: 248-538-2260

Kokomo
2767 S. Albright Road
Kokomo, IN 46902
Tel: 765-864-8360
Fax: 765-864-8387

Los Angeles
18201 Von Karman, Suite 1090
Irvine, CA 92612
Tel: 949-263-1888
Fax: 949-263-1338

San Jose
1300 Terra Bella Avenue
Mountain View, CA 94043
Tel: 650-215-1444
Fax: 650-961-0286

Toronto
6285 Northam Drive, Suite 108
Mississauga, Ontario L4V 1X5, Canada
Tel: 905-673-0699
Fax: 905-673-6509

ASIA/PACIFIC

Australia
Suite 22, 41 Rawson Street
Epping 2121, NSW
Australia
Tel: 61-2-9868-6733
Fax: 61-2-9868-6755

China - Beijing
Unit 706B
Wan Tai Bei Hai Bldg.
No. 6 Chaoyangmen Bei Str.
Beijing, 100027, China
Tel: 86-10-85282100
Fax: 86-10-85282104

China - Chengdu
Rm. 2401-2402, 24th Floor,
Ming Xing Financial Tower
No. 88 TIDU Street
Chengdu 610016, China
Tel: 86-28-86766200
Fax: 86-28-86766599

China - Fuzhou
Unit 28F, World Trade Plaza
No. 71 Wusi Road
Fuzhou 350001, China
Tel: 86-591-7503506
Fax: 86-591-7503521

China - Hong Kong SAR
Unit 901-6, Tower 2, Metroplaza
223 Hing Fong Road
Kwai Fong, N.T., Hong Kong
Tel: 852-2401-1200
Fax: 852-2401-3431

China - Shanghai
Room 701, Bldg. B
Far East International Plaza
No. 317 Xian Xia Road
Shanghai, 200051
Tel: 86-21-6275-5700
Fax: 86-21-6275-5060

China - Shenzhen
Rm. 1812, 18/F, Building A, United Plaza
No. 5022 Binhe Road, Futian District
Shenzhen 518033, China
Tel: 86-755-82901380
Fax: 86-755-8295-1393

China - Shunde
Room 401, Hongjian Building, No. 2
Fengxiangnan Road, Ronggui Town, Shunde District, Foshan City, Guangdong 528303, China
Tel: 86-757-28395507 Fax: 86-757-28395571

China - Qingdao
Rm. B505A, Fullhope Plaza,
No. 12 Hong Kong Central Rd.
Qingdao 266071, China
Tel: 86-532-5027355 Fax: 86-532-5027205

India
Divyasree Chambers
1 Floor, Wing A (A3/A4)
No. 11, O'Shaugnessey Road
Bangalore, 560 025, India
Tel: 91-80-22290061 Fax: 91-80-22290062

Japan
Benex S-1 6F
3-18-20, Shinyokohama
Kohoku-Ku, Yokohama-shi
Kanagawa, 222-0033, Japan
Tel: 81-45-471- 6166 Fax: 81-45-471-6122

Korea
168-1, Youngbo Bldg. 3 Floor
Samsung-Dong, Kangnam-Ku
Seoul, Korea 135-882
Tel: 82-2-554-7200 Fax: 82-2-558-5932 or 82-2-558-5934

Singapore
200 Middle Road
#07-02 Prime Centre
Singapore, 188980
Tel: 65-6334-8870 Fax: 65-6334-8850

Taiwan
Kaohsiung Branch
30F - 1 No. 8
Min Chuan 2nd Road
Kaohsiung 806, Taiwan
Tel: 886-7-536-4818
Fax: 886-7-536-4803

Taiwan
Taiwan Branch
11F-3, No. 207
Tung Hua North Road
Taipei, 105, Taiwan
Tel: 886-2-2717-7175 Fax: 886-2-2545-0139

EUROPE

Austria
Durisolstrasse 2
A-4600 Wels
Austria
Tel: 43-7242-2244-399
Fax: 43-7242-2244-393

Denmark
Regus Business Centre
Lautrup hoj 1-3
Ballerup DK-2750 Denmark
Tel: 45-4420-9895 Fax: 45-4420-9910

France
Parc d'Activite du Moulin de Massy
43 Rue du Saule Trapu
Batiment A - ler Etage
91300 Massy, France
Tel: 33-1-69-53-63-20
Fax: 33-1-69-30-90-79

Germany
Steinheilstrasse 10
D-85737 Ismaning, Germany
Tel: 49-89-627-144-0
Fax: 49-89-627-144-44

Italy
Via Quasimodo, 12
20025 Legnano (MI)
Milan, Italy
Tel: 39-0331-742611
Fax: 39-0331-466781

Netherlands
Waegenburghtplein 4
NL-5152 JR, Drunen, Netherlands
Tel: 31-416-690399
Fax: 31-416-690340

United Kingdom
505 Eskdale Road
Winnersh Triangle
Wokingham
Berkshire, England RG41 5TU
Tel: 44-118-921-5869
Fax: 44-118-921-5820

05/28/04