THIS DRAWING IS UNPUBLISHED. RELEASED FOR PUBLICATION -
© COPYRIGHT 19 BY AMP INCORPORATED. ALL RIGHTS RESERVED.

LOC	DIST
FT	0

REVISIONS

P	LTR	DESCRIPTION	DATE	DWN	APVD
	0	RELEASED	31MAR100	SW	-
	A	REVISED EC 0G3B-0097-00	20APR00	SW	MC
	B	REVISED EC 0G3B-0280-00	01JUN2000	SW	MC

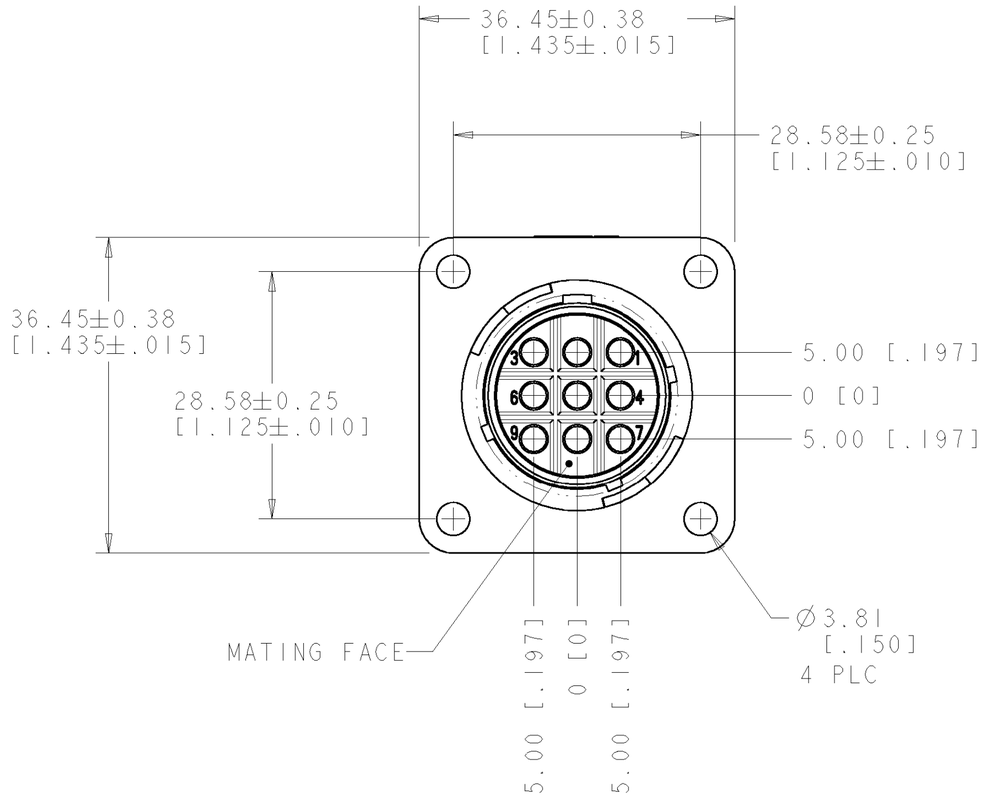

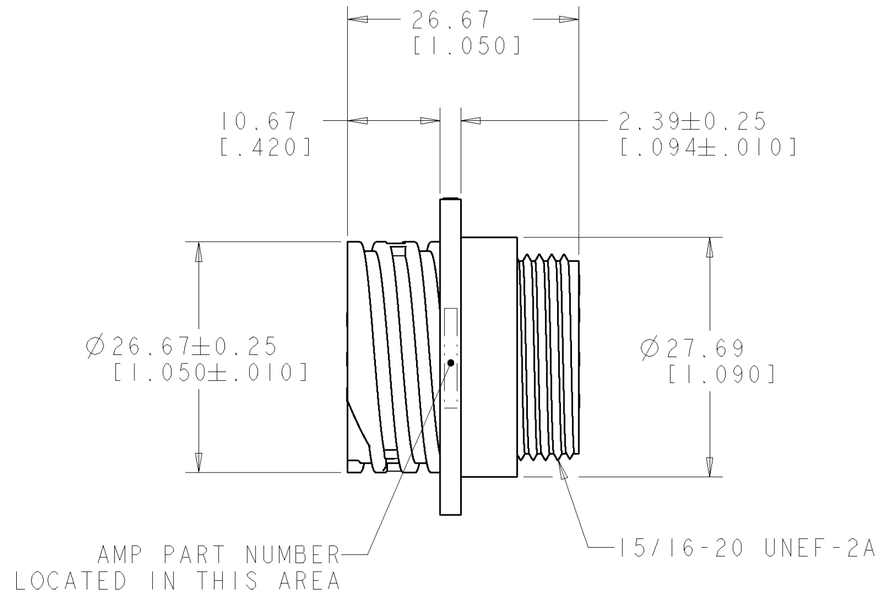

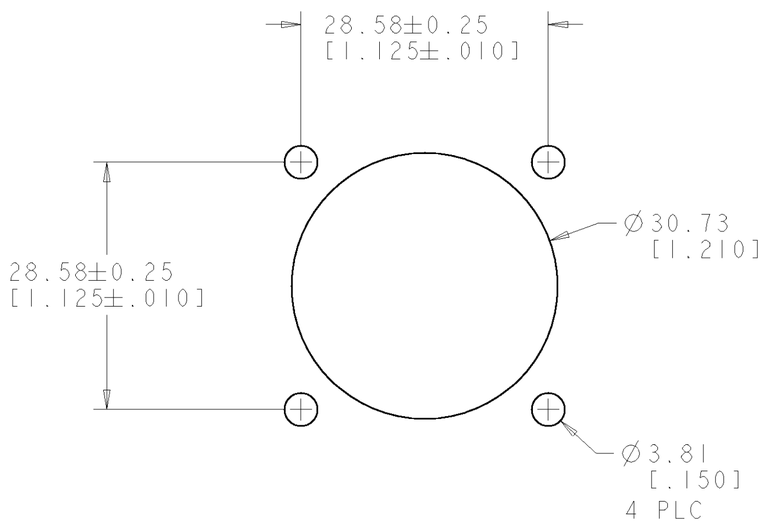

RECOMMENDED PANEL CUTOUT
3.18[.125] MAX PANEL THICKNESS

1. NYLON, BLACK.
2. HOUSING WILL ACCEPT NINE MULTIMATE SOCKET CONTACTS.
3. CAVITY IDENTIFICATION ON FRONT AND REAR FACE.

796439-2
PART NUMBER

THIS DRAWING IS A CONTROLLED DOCUMENT FOR AMP INCORPORATED. IT IS SUBJECT TO CHANGE AND THE CONTROLLING ENGINEERING ORGANIZATION SHOULD BE CONTACTED FOR THE LATEST REVISION.

DIMENSIONS: mm[INCHES]

TOLERANCES UNLESS OTHERWISE SPECIFIED:
0 PLC ±-
1 PLC ±0.1
2 PLC ±0.02
3 PLC ±0.005
4 PLC ±0.0005
ANGLES ±-
FINISH -

MATERIAL -

DWN S.WELDON 31MAR100
CHK M.CHACKO 31MAR100
APVD M.CHACKO 31MAR100
PRODUCT SPEC -
APPLICATION SPEC -
WEIGHT -

AMP Incorporated
Harrisburg, PA 17105-3608

NAME RECEPTACLE HOUSING, SIZE 17-9, REVERSE SEX, CPC
-

SIZE	CAGE CODE	DRAWING NO	RESTRICTED TO
A2	00779	C-796439	-

CUSTOMER DRAWING | SCALE 2:1 | SHEET 1 OF 1 | REV B

AMP 1471-9 REV 27JUN96

Pro/ENGINEER DRAWING