(f) Timers

LN - 12

TYPE	Supply Voltage V (min/max)	Supply Current @ 15V mA (typ)	Drift with Temp PPM/°C M/A $ (typ)	Threshold Voltage V_{CC}	Trigger Voltage V_{CC} Volts (typ)	Trigger Current @ $V_{TRA}=0$ µA (typ)	Reset Voltage Volts (typ)	Threshold Current nA (typ/max)	Rise Time at Output n sec	Temp Range °C	Case
SE555	4.5/18	10	30/90	0.667	0.33	0.5	0.7ϕ	0.1/0.25	100	-55/+125	TO-99
NE555	4.5/16	10	50/150	0.667	0.33	0.5	0.7ϕ	0.1/0.25	100	0/+70	TO-99/ Plastic DIP8 Pin

$ Monostable/Astable ϕ Specified with trigger input high

LN 07

(g) Fixed voltage regulators (+ve/-ve voltage regulators)

TYPE	Vin V min/max	Vout V min/max	Line Regulation mV	Load Regulation mV	ICC mA	ΔICC mA	ISC mA typ	IDS mA typ	Ripple Rejection min dB	Long term Stability max mV	PD * W	Case
7805	7/35	4.8/5.2	50	50	6.0	0.8	750	-	68	20	25	TO-3
7812	14/35	11.5/12.5	120	120	6.0	0.8	350	-	61	48	25	TO-3
7815	17/40	14.4/15.6	150	150	6.0	0.8	230	-	60	60	25	TO-3
7905	-7/-35	-4.8/-5.2	50	50	2.0	-	-	500	54	-	25	TO-3
7912	-14/-35	-11.5/-12.5	120	120	3.0	-	-	500	54	-	25	TO-3
7915	-17/-40	-14.4/-15.6	150	150	3.0	-	-	500	54	-	25	TO-3
LM 309	7/35	4.8/5.2	50	100	6.0	-	-	-	65	20	20	TO-3
LM 327	± 30	4.8/5.2	15	10	3.0	-	260	-	-	0.2%	2.0	TO-99/ DIP 14 Pin

* At $T_C=25°C$ † Typical **IDGO

LN07

(h) Adjustable voltage regulators

TYPE	V in V min/max	V out V min/max	VRF V typ.	Line Regulation %/V	Load Regulation %	Load Current	Current Limit	Quiescent current max	Ripple rejection dB	Temp. stability %	Temp. Range °C	Case
µA 723	9.5/40	2/37	7.15	0.01	0.15	150 mA	65 mA	3.5	74.0	0.002	-50/125	TO-96
µA 723C	9.5/40	2/37	7.15	0.01	0.2	150 mA	65 mA	4.0	74.0	0.003	-50/125	TO-96/DIP
SMC 3085	7.5/40	1.6/36	1.6	0.1	0.6	100 mA	120 mA	5.0	50	-	-55/125	TO-99
LM. 317	3/40	1.3/37	1.25	0.01	0.1	1.5 A	2.2 A	-	65	1.0	0/125	TO-3

CASE OUTLINES

SEMICONDUCTORS

DO-7

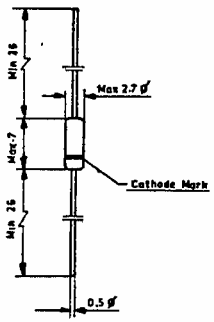

DO-35

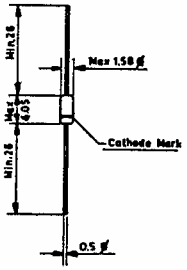

SOT-25

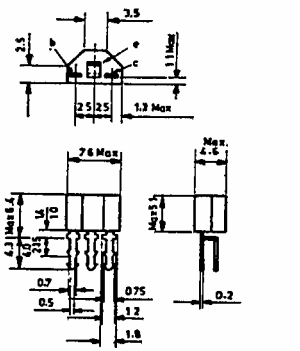

E & B ARE INTERCHANGED FOR SOME DEVICES

TO-3

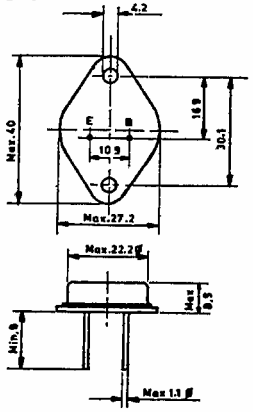

TO-5

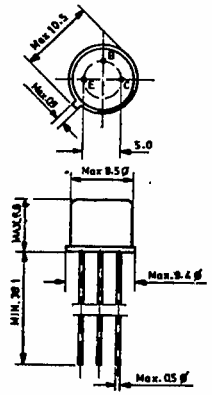

TO-18

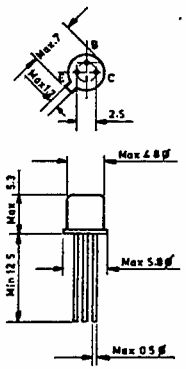

TO-39

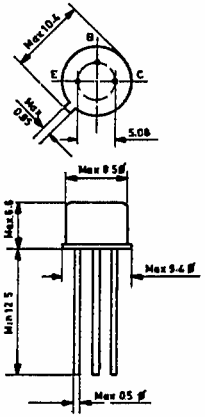

TO-66

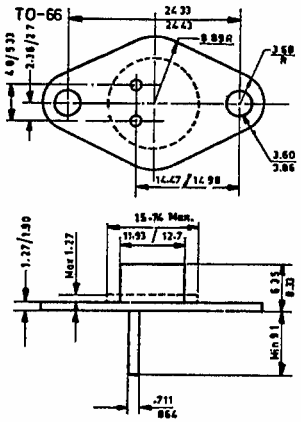

TO-72

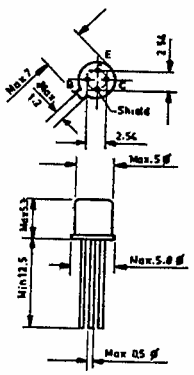

E & B ARE INTERCHANGED FOR SOME DEVICES

TO-92

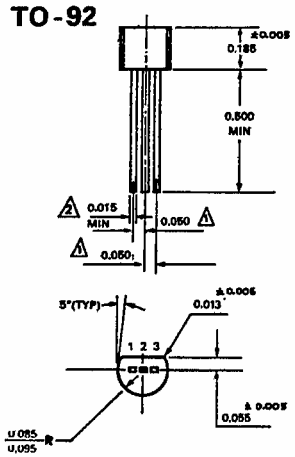

(Dimensions in inches)

Note : Dimensions in mm unless otherwise specified

TO-96

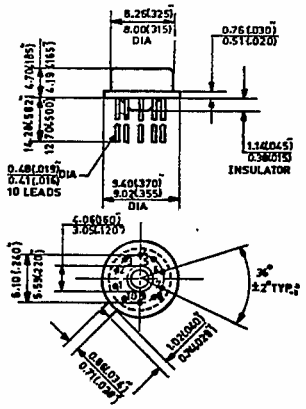

TO-99

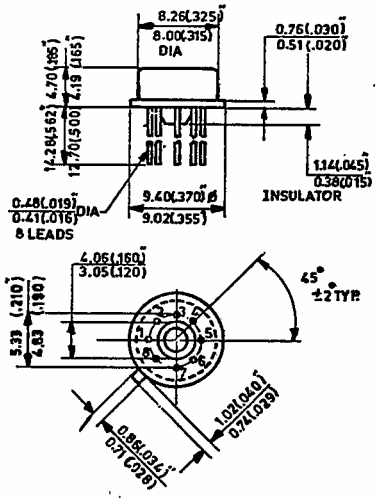

TO-105

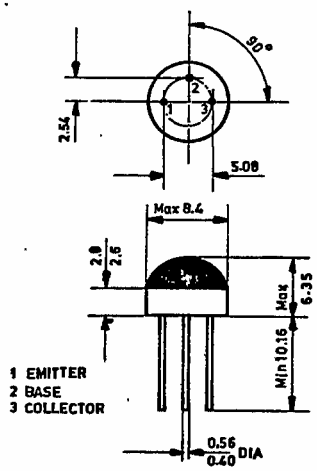

TO-106

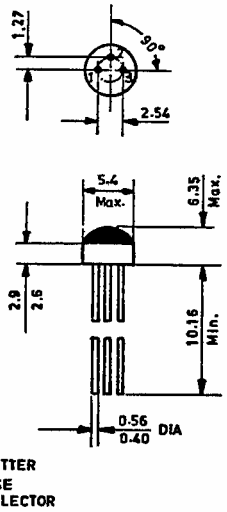

TO-220

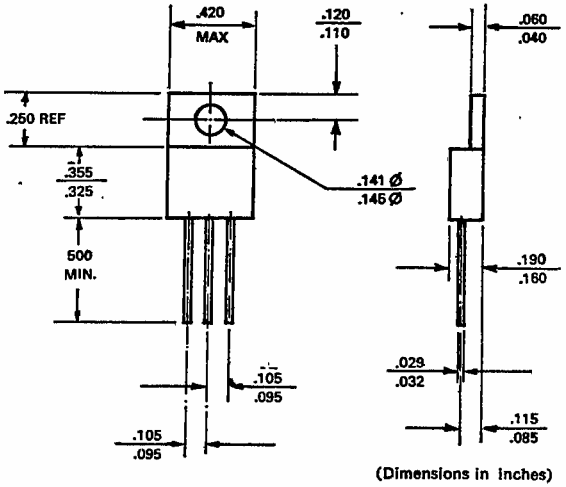

14 pin DIP

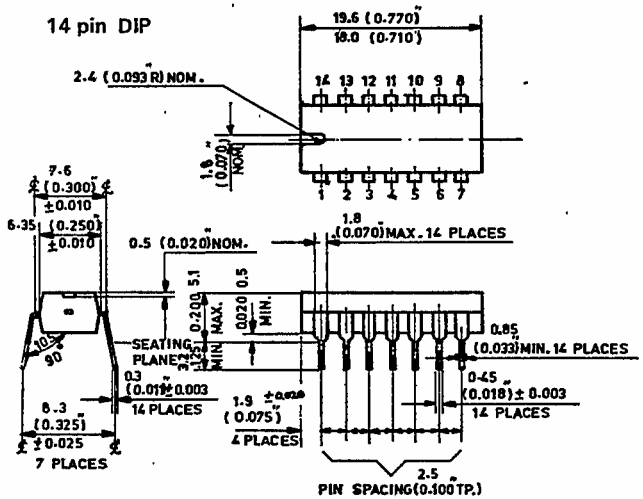

16 pin DIP

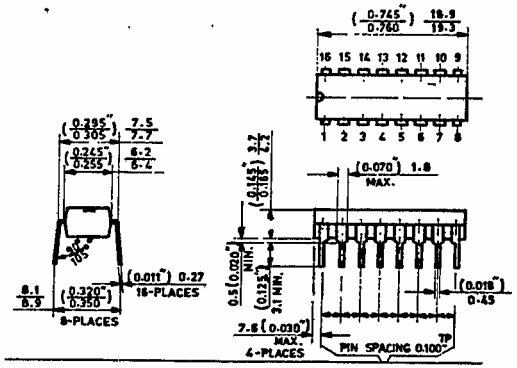

Note : Dimensions in mm unless otherwise specified