www.DataSheet4U.com

16 CHARACTERS X 2 LINES
CHARACTER SIZE: 2.95W X 4.85H mm (5 X 7 DOTS)
2.95W X 5.55H mm (5 X 8 DOTS)

# MDL(S)-16265 XLV *

* XLV: OPERATE WITH SINGLE 3V SUPPLY

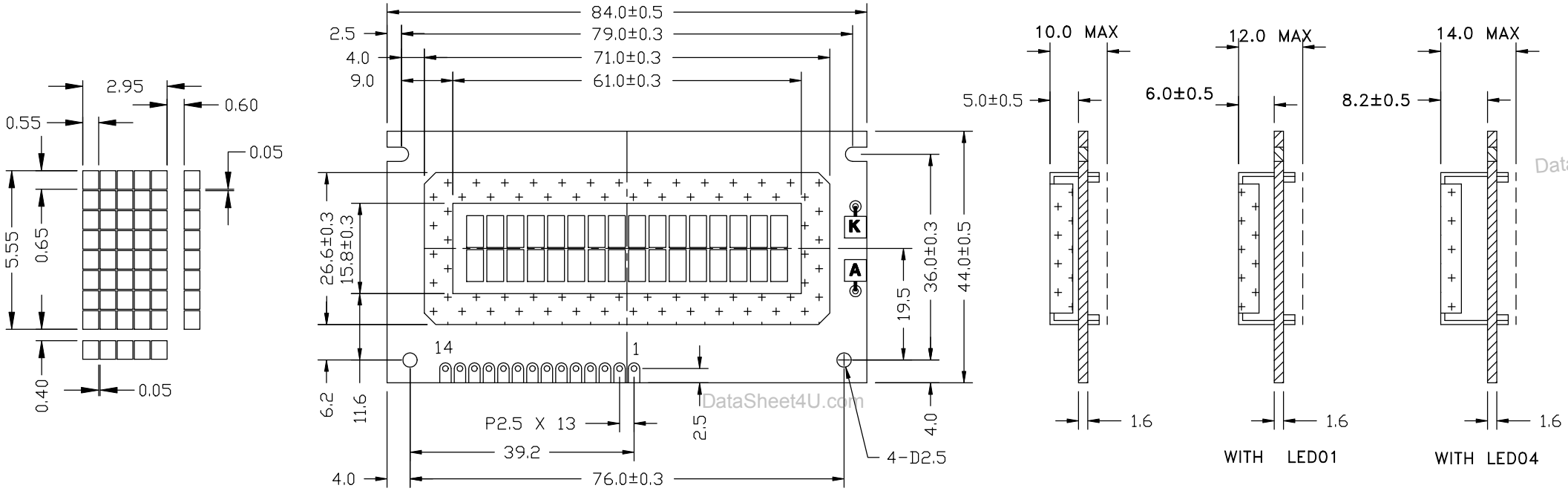


| 14 PIN CONNECTION | 1 | 2 | 3 | 4 | 5 | 6 | 7 | 8 | 9 | 10 | 11 | 12 | 13 | 14 | A | K |
|---|---|---|---|---|---|---|---|---|---|---|---|---|---|---|---|---|
| | VSS | VDD | V0 | RS | R/W | E | DB0 | DB1 | DB2 | DB3 | DB4 | DB5 | DB6 | DB7 | LED(+) | LED(−) |

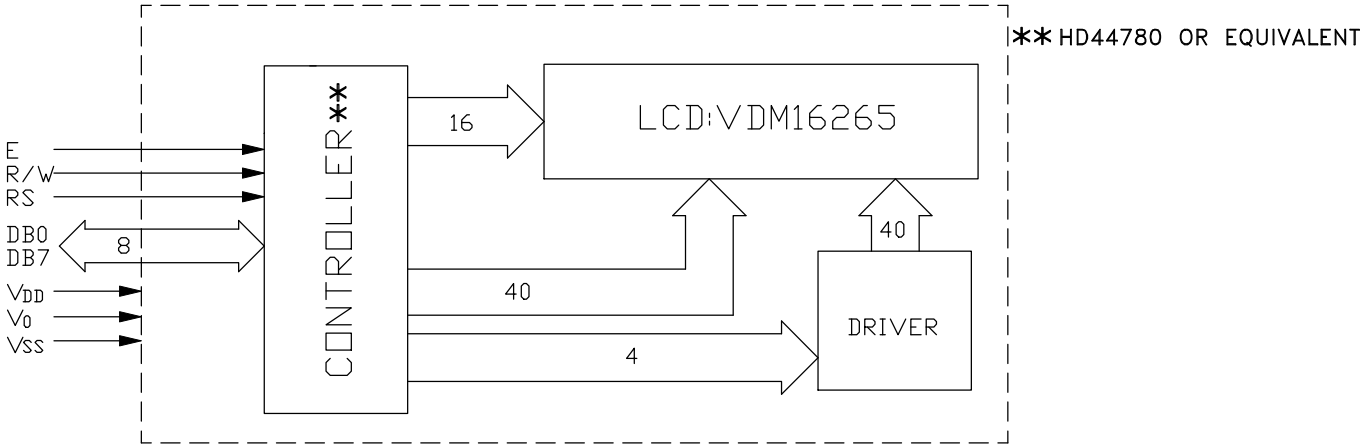


DataSheet4U.com
www.DataSheet4U.com
DataSheet4U.com
DataSheet4U.com