Model(型號): RKJXP0501

► Download PDF file

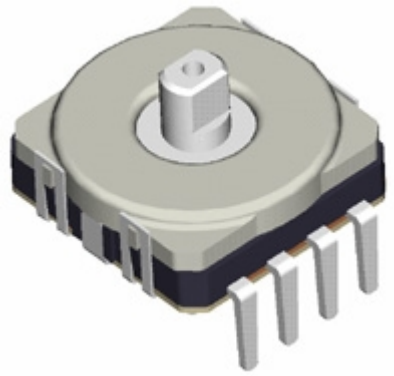

Features:(特點):

Compact design with a good space factor.
Available in a wide variety of type including standard type and lever reset type.
Constructed integral with tact switch for selection ,thus contributing to improvement in the operability of sets.

Applications(作用):

Controller for remote control of audio equipment , CD-L , VCD , TV ,car navigation system, and for game , etc .

Dimensions(規格圖):

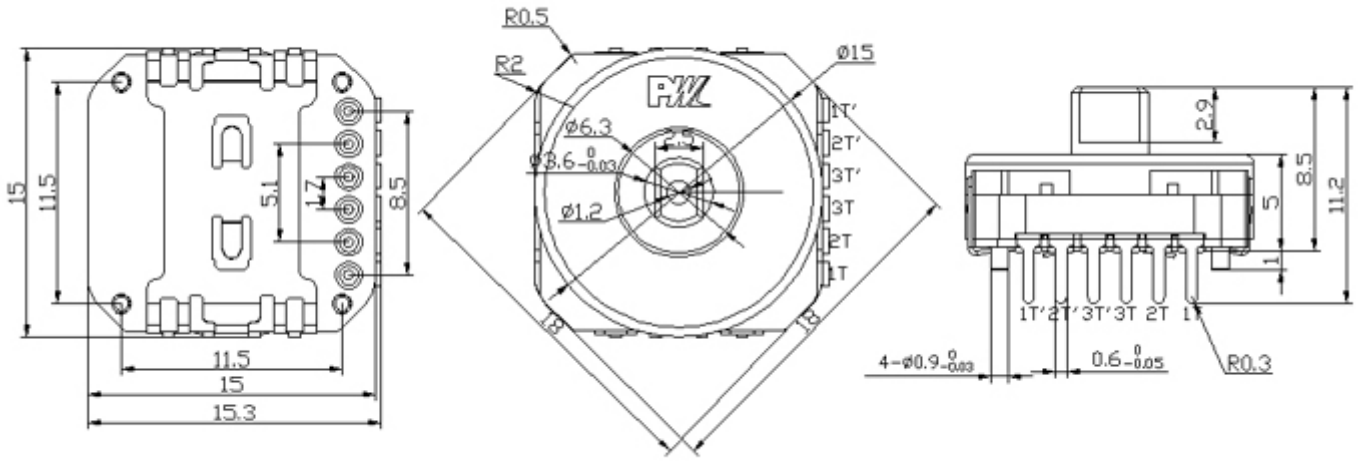

Specifications(規格)

Electrical Characteristics [電氣性能]

Total resistance [全阻抗值]	10KΩ , 50K Ω , 100KΩ
Total resistance tolerance [全阻抗值容許差]	±30%
Ratings power(w) [額定功率]	0.0125W, Switch 5V DC
Resistance taper [阻抗變化特性]	B
Residual resistance [殘留阻值]	全阻值 3%Ω Max.
Sliding noise [滑動雜音]	300mV Max
Insulation resistance [絕緣阻抗]	100MΩ Min. at DC 250V. Switch 10MΩ Min. DC 10V
Withstanding voltage [耐電壓]	1 minute at AC 250V
Max. operating voltage [最高使用電壓]	AC 50V

Mechanical Characteristics [机械性能]

Operation torque [回轉力矩]	150~200gf.cm
Rotation stopper strength [止動強度]	3Kgf.cm Min
Switch Travel [開關移動量]	0.5 mm

Endurance Characteristics [耐久性能]

Rotational life [回轉壽命]	More than 1,000,000 cycles