Frequency Multipliers

X4, X8 Multiplication

SPECTRUM MICROWAVE

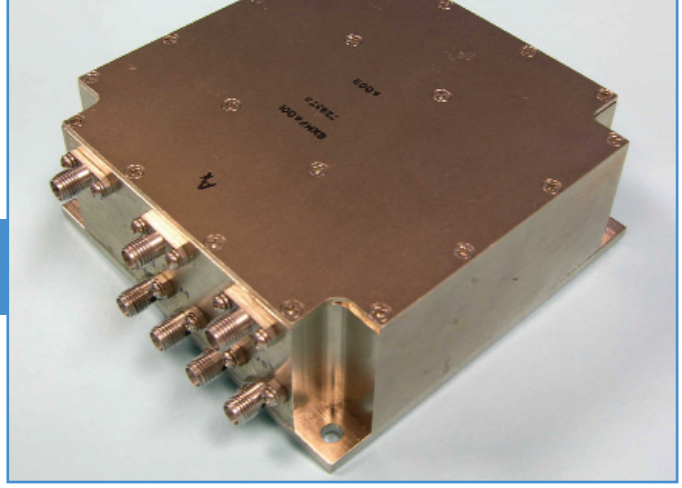

Spectrum Microwave offers a line of low noise frequency multipliers based on multiple passive doubler/ amplifier combinations. These custom designed assemblies cover input frequency ranges of 5 to 500 MHz with output frequencies in the range of 100 to 1000 MHz. Narrowband or broadband devices are available. Additive phase noise testing ensures low phase noise/jitter performance. All internal amplifiers and doublers are contained in rugged TO-8 hermetic packages for excellent performance over military environmental conditions.

Features

- Low additive noise (-146 dBc/Hz 10 KHz offset X8 multiplication)
- Low harmonic and sub harmonic content (-60 dBc)
- Low discrete Spurious (-75 dBc integrated over a 10 MHz Bandwidth)
- High reliability (200,000 hour MTBF Naval Sheltered)

Optional Features

- Output filtering
- Digital ECL outputs (single or differential)
- Built in test power detectors
- Internal voltage regulation

Typical Performance Characteristics

Input Frequency Range		5 – 500 MHz
Output Frequency Range		100 – 1000 MHz
Bandwidth		2%
Pin		10 dBm
Pout		0 dBm
ECL Differential Delay		≥ 100 ps
Harmonics		≤ -50 dBc
Sub-Harmonics		≤ -70 dBc
Phase Noise	1 KHz	-146 dBc/Hz
(Referenced to Input)	10 KHz	- 158 dBc/Hz
	100 KHz	-158 dBc/Hz
Input Power		+5 VDC and +15 VDC @ 60 mA
Package Size		4" x 4" x 1.5"

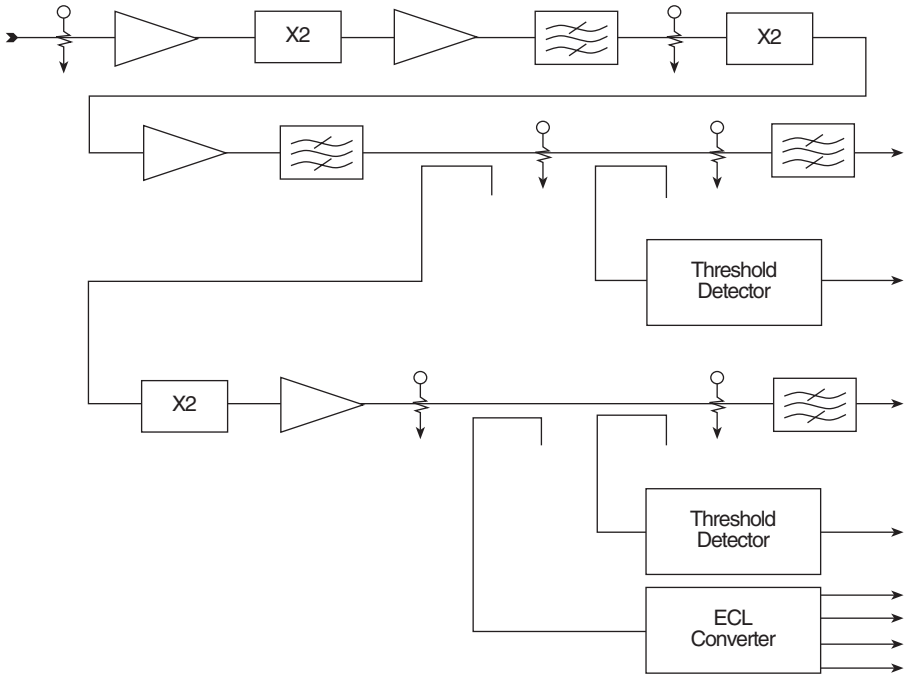

ISO 9001 CERTIFIED

SPECTRUM MICROWAVE • 2707 Black Lake Place • Philadelphia, PA 19154 • Phone: (215) 464-4000 • Fax: (215) 464-4001
SPECTRUM CONTROL GmbH • Hansastrasse 6 • 91126 Schwabach, Germany • Phone: (49)-9122-795-0 • Fax: (49)-9122-795-58

SPECTRUM MICROWAVE INC.
A Spectrum Control Business
www.specwave.com