Approved by:
Checked by:
Issued by:

SPECIFICATION

PRODUCT: SAW FILTER

MODEL: HF4504D (M1967D) SIP5D

HOPE MICROELECTRONICS CO.,LIMITED

Tel:+86-755-82973806 Fax:+86-755-82973550 E-mail: sales@hoperf.com http://www.hoperf.com

1.Construction

1.1 Dimension and materials

Type : F4504D

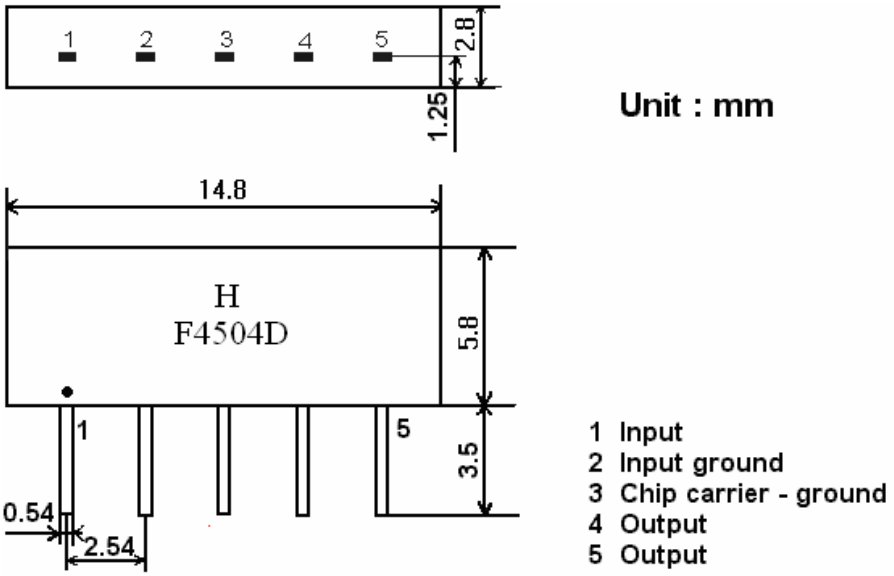

1.2. Circuit construction, measurement circuit

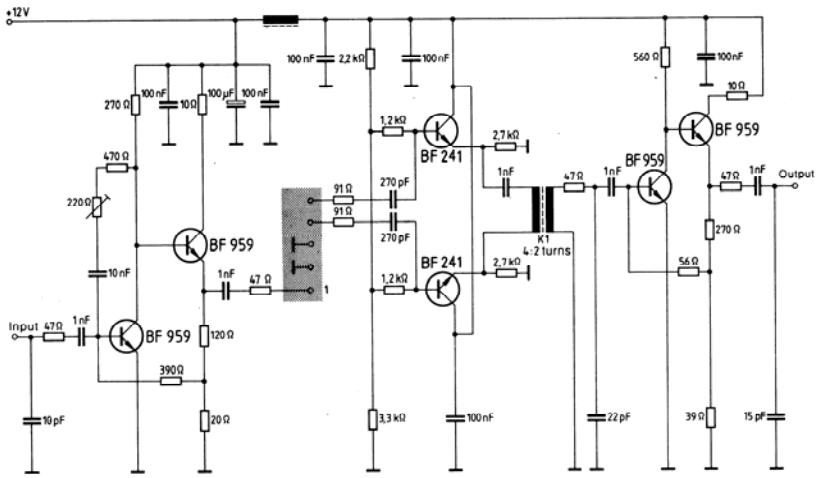

Test circuit for SIP-5 filter
Input impedance of the symmetrical post-amplifier: 2 kΩ in parallel with 3 pF

2.Characteristics

<u>Standard atmospheric conditions</u>

Unless otherwise specified , the standard rang of atmospheric conditions for making measurements and tests is as follows;

Ambient temperature : 15℃ to 35℃
Relative humidity : 25% to 85%
Air pressure : 86kPa to 106kPa

Operating temperature rang

Operating temperature rang is the rang of ambient temperatures in which the filter can be operated continuously. -10℃ ~ +60℃

Storage temperature rang

Storage temperature rang is the rang of ambient temperatures at which the filter can be stored without damage.
Conditions are as specified elsewhere in these specifications. -40℃ ~ +70℃

Reference temperature +25℃

2.1 Maximum Rating

DC voltage	**VDC**	**12**	**V**	**Between any terminals**
AC voltage	**Vpp**	**10**	**V**	**Between any terminals**

2.2 Electrical Characteristics

Source impedance Z_S=50Ω

Load impedance Z_L=2kΩ//3pF T_A=25℃

	Freq	Min	typ	max	
Insertion attenuation Reference level	44.06MHz	10.7	12.7	14.7	dB
Relative attenuation	45.81MHz	4.5	6.0	7.5	dB
	42.23MHz	-0.5	1.0	2.5	dB
	41.98MHz	-	3.0	-	dB
	41.73MHZ	-	7.4	-	dB
	41.31MHz	17.1	19.1	21.1	dB
	39.81MHz	42.0	50.0		dB
	47.31MHz	40.0	48.0		dB
Sidelobe	35.06~39.81MHz	35.0			dB
	47.31~55.06MHz	35.0			dB
Impedance at 44,06 MHz					
Input: $Z_{IN} = R_{IN} \| C_{IN}$		-	0,9 || 14,9	-	kΩ || pF
Output: $Z_{OUT} = R_{OUT} \| C_{OUT}$		-	0,9 || 4,1	-	kΩ || pF
Temperature coefficient		-72			ppm/k

2.3 Environmental Performance Characteristics

Item Test condition	Allowable change of absolute Level at center frequency(dB)
High temperature test 70℃ 1000H	< 1.0
Low temperature test -40℃ 1000H	< 1.0
Humidity test 40℃ 90-95% 1000H	< 1.0

Thermal shock -20℃==25℃==80℃ 20 cycle 30M 10M 30M	< 1.0
Solder temperature test Sold temp.260℃ for 10 sec.	< 1.0
Soldering Immerse the pins melt solder at 260℃+5/-0℃ for 5 sec.	More then 95% of total area of the pins should be covered with solder

2.4 Mechanical Test

Item Test condition	Allowable change of absolute Level at center frequency(dB)
Vibration test 600-3300rpm amplitude 1.5mm 3 directions 2 H each	<1.0
Drop test On maple plate from 1 m high 3 times	<1.0
Lead pull test Pull with 1 kg force for 30 seconds	<1.0
Lead bend test 90° bending with 500g weigh 2 times	<1.0

2.5 Voltage Discharge Test

Item Test condition	Allowable change of absolute Level at center frequency(dB)
Surge test Between any two electrode 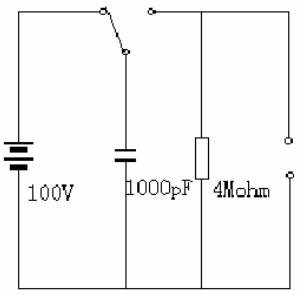	<1.0

2.6 Frequency response：

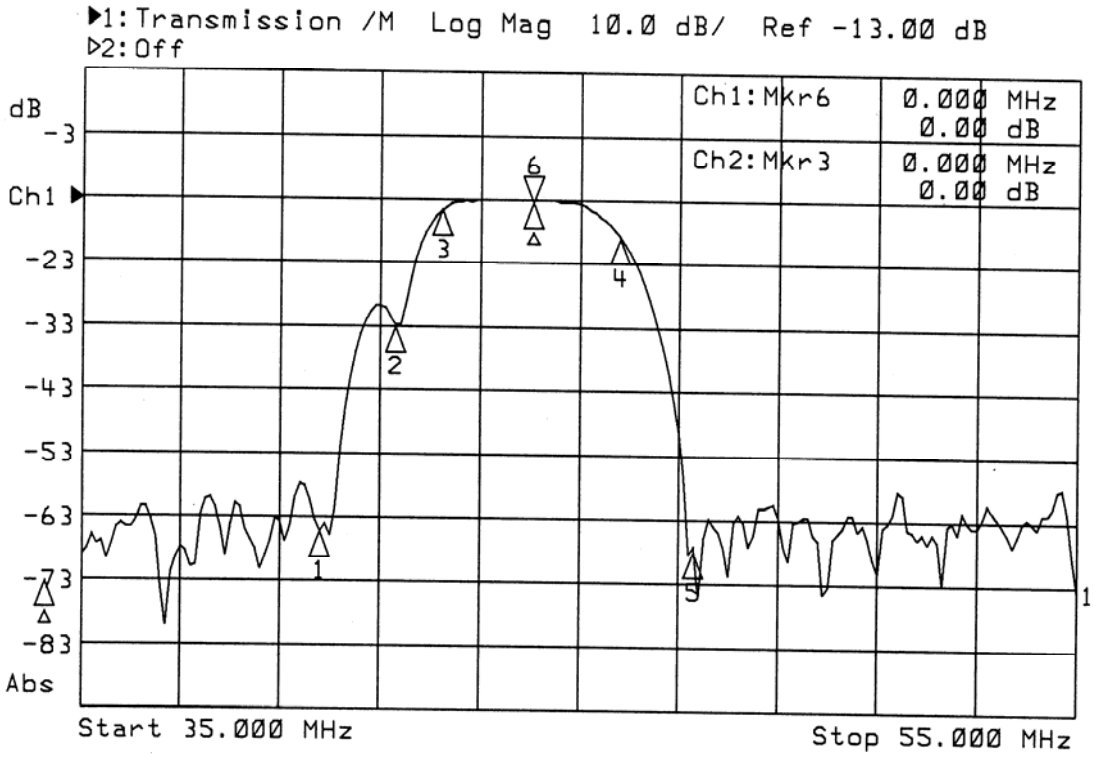

Mkr	ΔFreq (MHz)	Ch 1 (dB)	Freq (MHz)	Ch 2 (dB)
1	-4.250	-51.97		
2	-2.750	-19.69		
3	-1.830	-1.46		
4	1.750	-5.80		
5	3.250	-54.68		
6	0.000	0.00		
7				
8