used for: FILTER ADAPTER

| POS. | A -0.76 | B1 -0.25 | B2 +0.25 | C | D -0.3 | PART NO. |
|---|---|---|---|---|---|---|
| 9 | 31.19 | 16.46 | 16.79 | 25.00 +0.12 -0.13 | 6.12 | **243A10050X** |
| 15 | 39.52 | 24.79 | 25.12 | 33.30 +0.15 -0.1 | 6.12 | **243A10060X** |
| 25 | 53.42 | 38.50 | 38.84 | 47.04 ±0.13 | 5.99 | **243A10070X** |
| 37 | 69.70 | 54.96 | 55.30 | 63.50 ±0.13 | 5.99 | **243A10080X** |

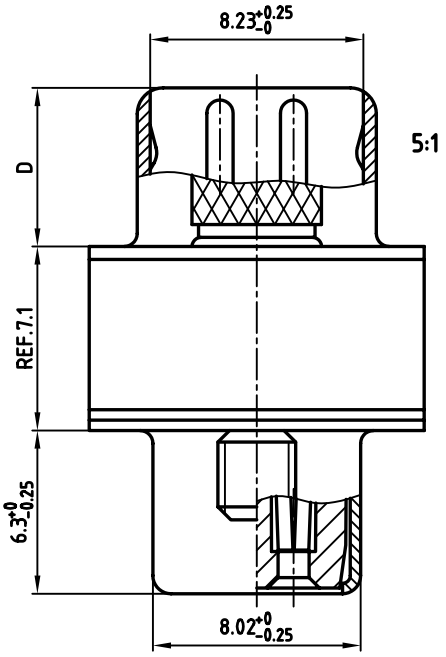


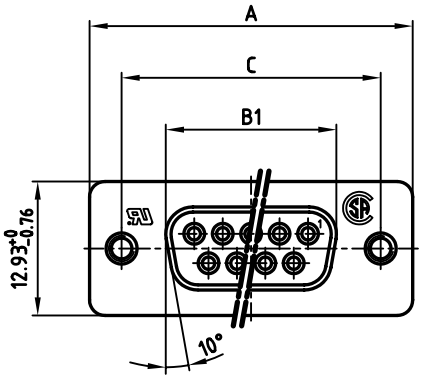


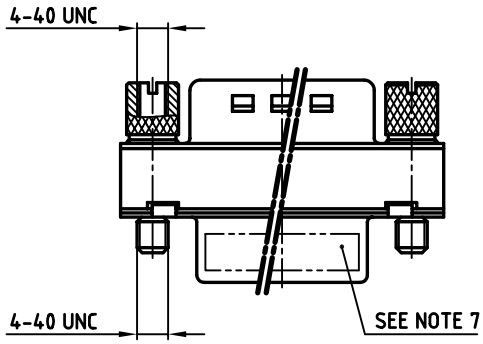


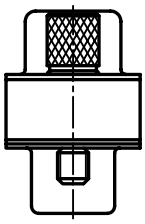

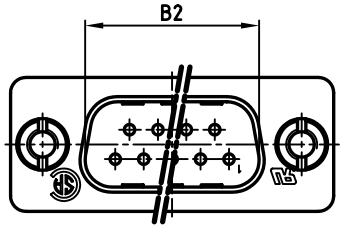


**NOTES:**

1. METALSHELLS: STEEL; min. 320µ" TIN
2. INSULATORS: PBT GF UL 94 V-0, BLACK
3. CONTACTS: COPPER ALLOY
   PLATING: 8µ" HARD GOLD OVER min. 50µ" NICKEL
4. CAPACITANCE: 1300pF ±20%
5. DIELECTRIC WITHSTANDING VOLTAGE: 424 VDC
6. MAXIMUM TORQUE VALUE FOR THREAD: 6" LBS
7. CONNECTOR IS PART MARKED: PART-NO. CONEC ABC

Directive 2002/95/EC „RoHS" Compliant

APPROVAL # FREIGABE # DEBLOCAGE # AUTOR/ZACION # APPROVAL

CUSTOMER APPROVAL DATE:

NAME: TITLE:

COMPANY NAME:

THIS DRAWING MAY NOT BE COPIED OR REPRODUCED IN ANY WAY, AND MAY NOT BE PASSED ON TO A THIRD PARTY WITHOUT WRITTEN PERMISSION. OWNERSHIP AND COPYRIGHT OF CONEC GmbH

DO NOT ALTER CAD DRAWING BY HAND

| rev. | description | date | name |
|---|---|---|---|

tolerance

dim. in mm

| 2005 | date | name |
|---|---|---|
| drawn | 03.08. | Lehmenkühler |
| appd. | 03.08. | Mickenbecker |
| norm | DIN 41652 | |
| d-old | | |

CONEC®

scale: 2:1 (5:1)

material: SEE NOTES

title:

**D-SUB C-FILTER ADAPTER**

9-37pos. PLUG / SOCKET

with jack screws

dwg no: 24K1A681

AutoCAD 2004 | DIN-A 3 | sh: 1/1

part no: SEE TABLE