OUTLINE DIMENSION & BLOCK DIAGRAM

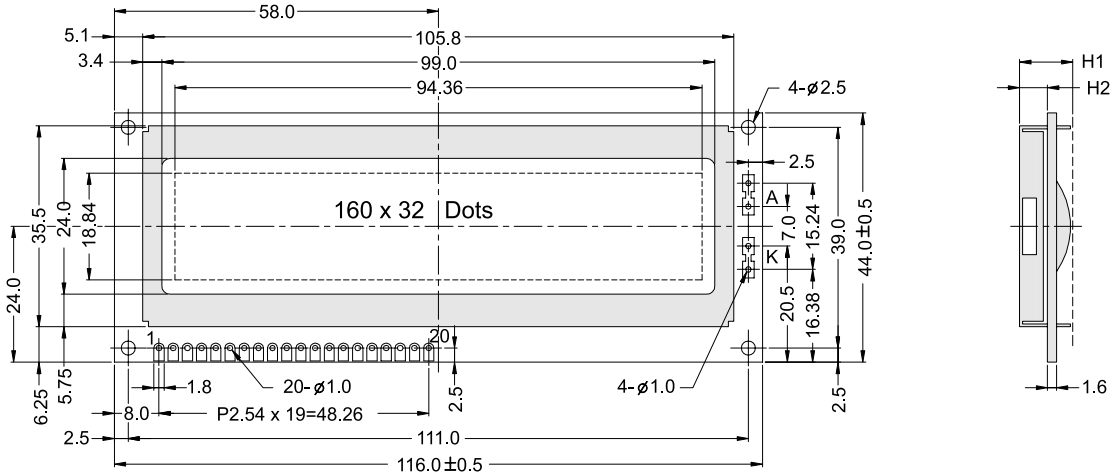

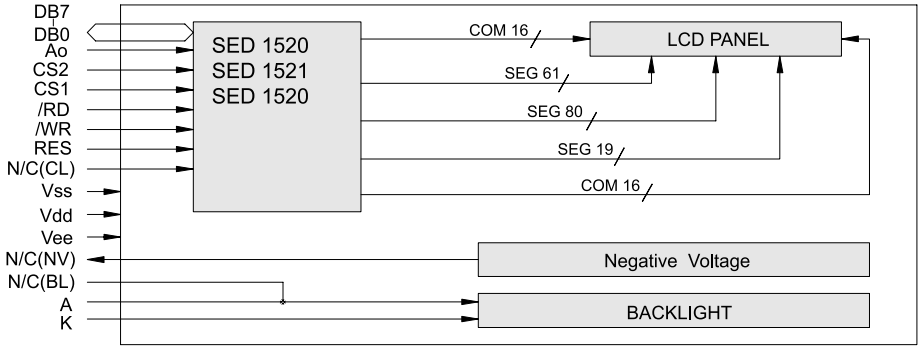

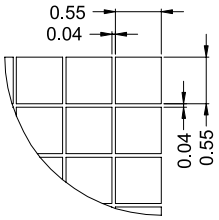

The tolerance unless classified ± 0.3mm

MECHANICAL SPECIFICATION			
Overall Size	116.0 x 44.0	Module	H2 / H1
View Area	99.0 x 24.0	W /O B/L	5.0 / 9.5
Dot Size	0.55 x 0.55	EL B/L	5.0 / 9.5
Dot Pitch	0.59 x 0.59	LED B/L	– / –

PIN ASSIGNMENT		
Pin no.	Symbol	Function
1	Ao	Command / data select
2	CS2	Chip select driver 2
3	CS1	Chip select driver 1
4	RD	Data read
5	WR	Data write
6	Vdd	Power supply(+)
7	Vss	Power supply(GND)
8-15	DB0-DB7	Data bus line
16	RES	Reset
17	Vee	Contrast adjust
18	N.C	No Connection
19	N.C	No Connection
20	N.C	No Connection

ABSOLUTE MAXIMUM RATING					
Item	Symbol	Condition	Min.	Max.	Units
Supply for logic voltage	Vdd-Vss	25°C	-0.3	8.0	V
LCD driving supply voltage	Vdd-Vee	25°C	-0.3	16.5	V
Input voltage	Vin	25°C	-0.3	Vdd-0.3	V

ELECTRICAL CHARACTERISTICS									
Item	Symbol	Condition	Min.		Typical		Max.		Units
Power supply voltage	Vdd-Vss	25°C	2.7		–		5.5		V
LCD operation voltage	Vop	Top	N	W	N	W	N	W	V
		-20°C	–	6.4	–	6.8	–	7.4	V
		0°C	–	–	–	–	–	–	V
		25°C	–	5.8	–	6.2	–	6.8	V
		50°C	–	–	–	–	–	–	V
		70°C	–	5.3	–	5.7	–	6.3	V
LCM current consumption (No B/L)	Idd	Vdd=5V	–		1		2.5		mA
Backlight current consumption	LED/edge	VB/L=4.2V	–		–		–		mA
	LED/array	VB/L=4.2V	–		–		–		mA