8-bit Microcontrollers

CMOS

F²MC-8FX MB95390H Series

MB95F394H/F396K/F398H/F394K/F396H/F398K

■ DESCRIPTION

MB95390H is a series of general-purpose, single-chip microcontrollers. In addition to a compact instruction set, the microcontrollers of this series contain a variety of peripheral resources.

Note: F²MC is the abbreviation of FUJITSU Flexible Microcontroller.

■ FEATURES

- F²MC-8FX CPU core
  Instruction set optimized for controllers
  - Multiplication and division instructions
  - 16-bit arithmetic operations
  - Bit test branch instructions
  - Bit manipulation instructions, etc.
- Clock
  - Selectable main clock source
    Main OSC clock (up to 16.25 MHz, maximum machine clock frequency: 8.125 MHz)
    External clock (up to 32.5 MHz, maximum machine clock frequency: 16.25 MHz)
    Main CR clock (1/8/10/12.5 MHz ±2% or ±2.5%*, maximum machine clock frequency: 12.5 MHz)
    *: The main CR clock oscillation accuracy of a product in LQFP package (FPT-48P-M49 or FPT-52P-M02) is ±2% and that of a product in QFN package (LCC-48P-M11) is ±2.5%.
  - Selectable subclock source
    Sub-OSC clock (32.768 kHz)
    External clock (32.768 kHz)
    Sub-CR clock (Typ: 100 kHz, Min: 50 kHz, Max: 200 kHz)
- Timer
  - 8/16-bit composite timer × 2 channels
  - 8/16-bit PPG × 3 channels
  - 16-bit PPG × 1 channel (can work independently or together with the multi-pulse generator)
  - 16-bit reload timer × 1 channel (can work independently or together with the multi-pulse generator)
  - Time-base timer × 1 channel
  - Watch prescaler × 1 channel

(Continued)

For the information for microcontroller supports, see the following website.

http://edevice.fujitsu.com/micom/en-support/

FUJITSU

(Continued)

- UART/SIO × 1 channel
  - Full duplex double buffer
  - Capable of clock-asynchronous (UART) serial data transfer and clock-synchronous (SIO) serial data transfer
- I^2C × 1 channel
  - Built-in wake-up function
- Multi-pulse generator (MPG) (for DC motor control) × 1 channel
  - 16-bit reload timer × 1 channel
  - 16-bit PPG timer × 1 channel
  - Waveform sequencer (including a 16-bit timer equipped with a buffer and a compare clear function)
- LIN-UART
  - Full duplex double buffer
  - Capable of clock-synchronous serial data transfer and clock-asynchronous serial data transfer
- External interrupt × 8 channels
  - Interrupt by edge detection (rising edge, falling edge, and both edges can be selected)
  - Can be used to wake up the device from different low power consumption (standby) modes
- 8/10-bit A/D converter × 12 channels
  - 8-bit and 10-bit resolution can be chosen.
- Low power consumption (standby) modes
  - Stop mode
  - Sleep mode
  - Watch mode
  - Time-base timer mode
- I/O port
  - MB95F394H/F396H/F398H (maximum no. of I/O ports: 44)
    General-purpose I/O ports (N-ch open drain) : 3
    General-purpose I/O ports (CMOS I/O) : 41
  - MB95F394K/F396K/F398K (maximum no. of I/O ports: 45)
    General-purpose I/O ports (N-ch open drain) : 4
    General-purpose I/O ports (CMOS I/O) : 41
- On-chip debug
  - 1-wire serial control
  - Serial writing supported (asynchronous mode)
- Hardware/software watchdog timer
  - Built-in hardware watchdog timer
  - Built-in software watchdog timer
- Low-voltage detection reset circuit
  - Built-in low-voltage detector
- Clock supervisor counter
  - Built-in clock supervisor counter function
- Programmable port input voltage level
  - CMOS input level / hysteresis input level
- Dual operation Flash memory
  - The erase/write operation and the read operation can be executed in different banks (upper bank/lower bank) simultaneously.
- Flash memory security function
  - Protects the content of the Flash memory

■ PRODUCT LINE-UP

Parameter \ Part number	MB95F394H	MB95F396H	MB95F398H	MB95F394K	MB95F396K	MB95F398K
Type	Flash memory product					
Clock supervisor counter	It supervises the main clock oscillation.					
Program ROM capacity	20 Kbyte	36 Kbyte	60 Kbyte	20 Kbyte	36 Kbyte	60 Kbyte
RAM capacity	496 bytes	1008 bytes	2032 bytes	496 bytes	1008 bytes	2032 bytes
Low-voltage detection reset	No			Yes		
Reset input	Dedicated			Selected through software		
CPU functions	• Number of basic instructions : 136 • Instruction bit length : 8 bits • Instruction length : 1 to 3 bytes • Data bit length : 1, 8 and 16 bits • Minimum instruction execution time : 61.5 ns (with machine clock frequency = 16.25 MHz) • Interrupt processing time : 0.6 µs (with machine clock frequency = 16.25 MHz)					
General-purpose I/O	• I/O ports (Max) : 44 • CMOS I/O : 41 • N-ch open drain: 3			• I/O ports (Max) : 45 • CMOS I/O : 41 • N-ch open drain: 4		
Time-base timer	Interval time: 0.256 ms to 8.3 s (with external clock frequency = 4 MHz)					
Hardware/ software watchdog timer	• Reset generation cycle - Main oscillation clock at 10 MHz: 105 ms (Min) • The sub-CR clock can be used as the source clock of the hardware watchdog timer.					
Wild register	It can be used to replace three bytes of data.					
LIN-UART	• A wide range of communication speeds can be selected by a dedicated reload timer. • Clock-synchronous serial data transfer and clock-asynchronous serial data transfer is enabled. • The LIN function can be used as a LIN master or a LIN slave.					
8/10-bit A/D converter	12 channels					
	8-bit resolution and 10-bit resolution can be chosen.					
8/16-bit composite timer	2 channels					
	• The timer can be configured as an "8-bit timer × 2 channels" or a "16-bit timer × 1 channel". • It has the following functions: timer function, PWC function, PWM function and input capture function. • Count clock: it can be selected from internal clocks (seven types) and external clocks. • It can output square wave.					
External interrupt	8 channels					
	• Interrupt by edge detection (The rising edge, falling edge, or both edges can be selected.) • It can be used to wake up the device from different standby modes.					
On-chip debug	• 1-wire serial control • It supports serial writing. (asynchronous mode)					

(Continued)

(Continued)

Part number / Parameter	MB95F394H	MB95F396H	MB95F398H	MB95F394K	MB95F396K	MB95F398K
UART/SIO	1 channel					
	• Data transfer with UART/SIO is enabled. • It has a full duplex double buffer, variable data length (5/6/7/8 bits), a built-in baud rate generator and an error detection function. • It uses the NRZ type transfer format. • LSB-first data transfer and MSB-first data transfer are available to use. • Clock-asynchronous (UART) serial data transfer and clock-synchronous (SIO) serial data transfer is enabled.					
I^2C	1 channel					
	• Master/slave transmission and receiving • It has the following functions: bus error function, arbitration function, transmission direction detection function, wake-up function, and functions of generating and detecting repeated START conditions.					
8/16-bit PPG	3 channels					
	• Each channel of PPG can be used as two 8-bit PPG channels or a single 16-bit PPG channel. • The counter operating clock can be selected from eight clock sources.					
16-bit PPG	• PWM mode and one-shot mode are available to use. • The counter operating clock can be selected from eight clock sources. • It supports external trigger start. • It can work independently or together with the multi-pulse generator.					
16-bit reload timer	• Two clock modes and two counter operating modes are available to use. • It can output square waveform. • Count clock: it can be selected from internal clocks (seven types) and external clocks. • Two counter operating modes: reload mode and one-shot mode • It can work independently or together with the multi-pulse generator.					
Multi-pulse generator (for DC motor control)	• 16-bit PPG timer: 1 channel • 16-bit reload timer operations: toggle output, one-shot output • Event counter: 1 channel • Waveform sequencer (including a 16-bit timer equipped with a buffer and a compare clear function)					
Watch prescaler	Eight different time intervals can be selected.					
Flash memory	• It supports automatic programming, Embedded Algorithm, and write/erase/erase-suspend/erase-resume commands. • It has a flag indicating the completion of the operation of Embedded Algorithm. • Number of write/erase cycles: 100000 • Data retention time: 20 years • Flash security feature for protecting the content of the Flash memory					
Standby mode	Sleep mode, stop mode, watch mode, time-base timer mode					
Package	FPT-48P-M49 FPT-52P-M02 LCC-48P-M11					

■ PACKAGES AND CORRESPONDING PRODUCTS

Part number / Package	MB95F394H	MB95F396H	MB95F398H	MB95F394K	MB95F396K	MB95F398K
FPT-48P-M49	O	O	O	O	O	O
FPT-52P-M02	O	O	O	O	O	O
LCC-48P-M11	O	O	O	O	O	O

O: Available

■ DIFFERENCES AMONG PRODUCTS AND NOTES ON PRODUCT SELECTION

- Current consumption

  When using the on-chip debug function, take account of the current consumption of flash erase/write.

  For details of current consumption, see “■ ELECTRICAL CHARACTERISTICS”.

- Package

  For details of information on each package, see “■ PACKAGES AND CORRESPONDING PRODUCTS” and “■ PACKAGE DIMENSIONS”.

- Operating voltage

  The operating voltage varies, depending on whether the on-chip debug function is used or not.

  For details of the operating voltage, see “■ ELECTRICAL CHARACTERISTICS”.

- On-chip debug function

  The on-chip debug function requires that V_{CC}, V_{SS} and one serial wire be connected to an evaluation tool. For details of the connection method, refer to “CHAPTER 29 EXAMPLE OF SERIAL PROGRAMMING CONNECTION” in the hardware manual of the MB95390H Series.

■ PIN ASSIGNMENT

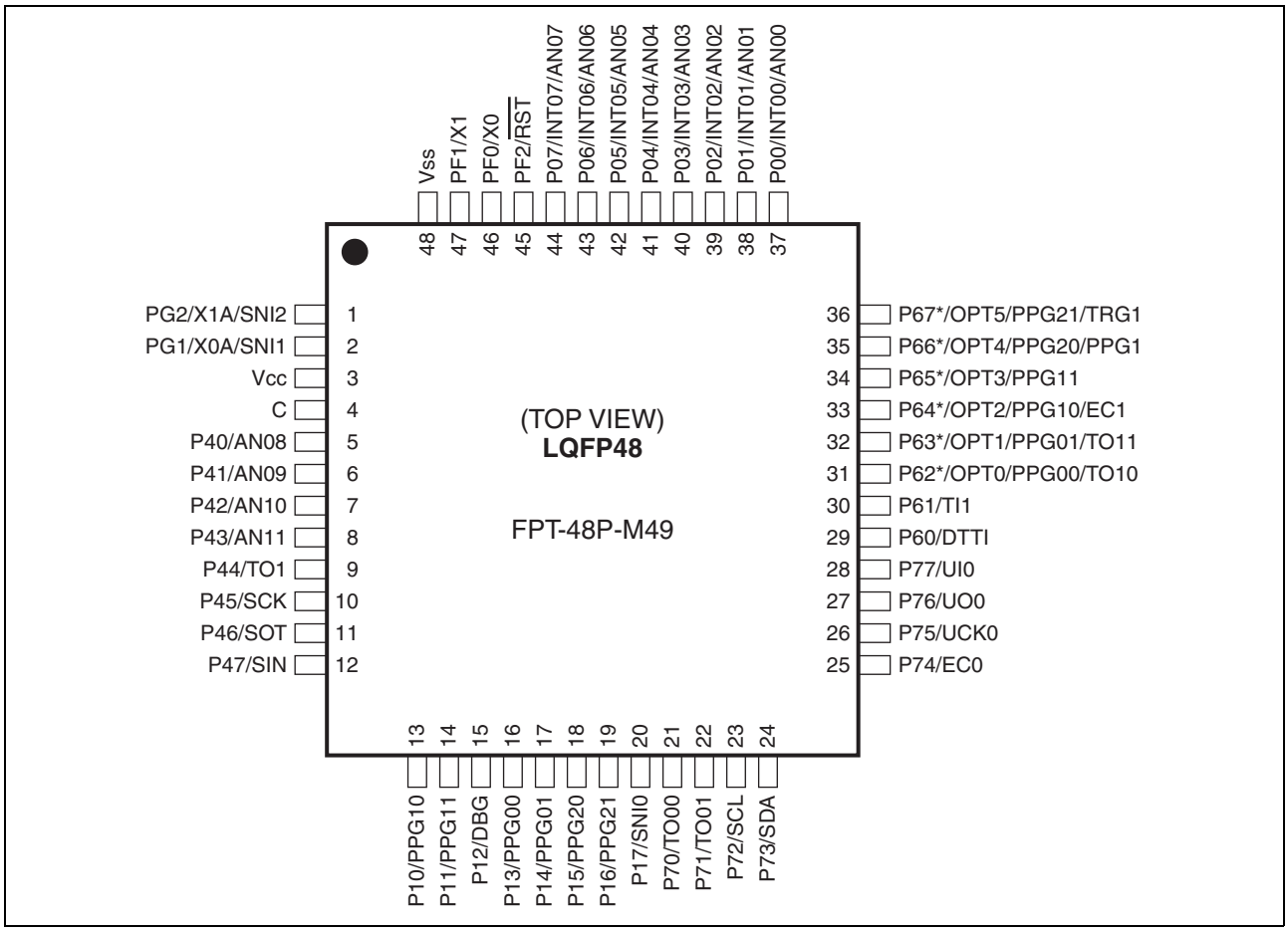

*: High-current pin (8 mA/12 mA)

(Continued)

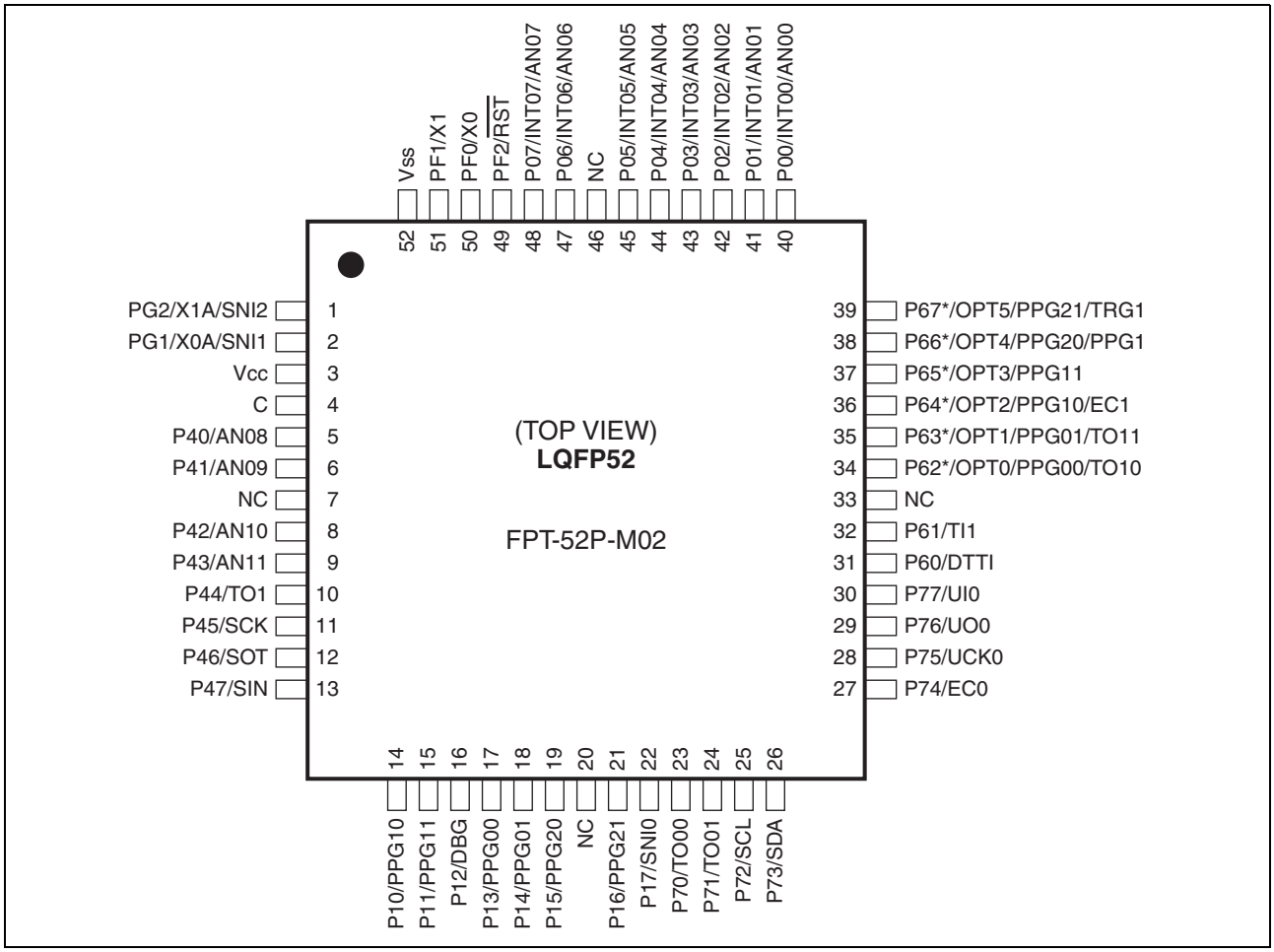

*: High-current pin (8 mA/12 mA)

(Continued)

(Continued)

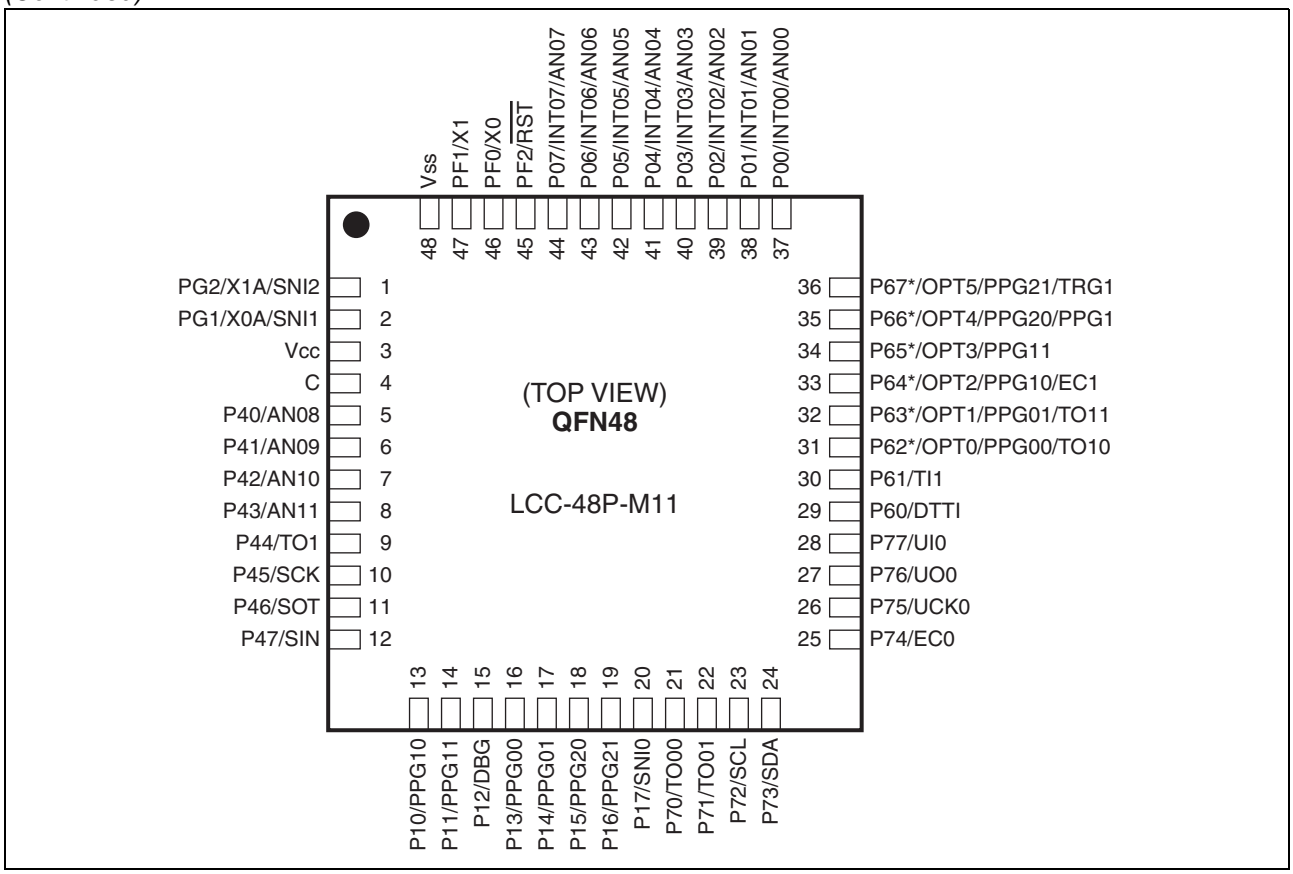

*: High-current pin (8 mA/12 mA)

■ PIN FUNCTIONS

Pin no.			Pin name	I/O circuit type*4	Function
LQFP48*1	QFN48*2	LQFP52*3			
1	1	1	PG2	C	General-purpose I/O port
			X1A		Subclock I/O oscillation pin
			SNI2		Trigger input pin for the position detection function of the MPG waveform sequencer
2	2	2	PG1	C	General-purpose I/O port
			X0A		Subclock input oscillation pin
			SNI1		Trigger input pin for the position detection function of the MPG waveform sequencer
3	3	3	V_{CC}	—	Power supply pin
4	4	4	C	—	Capacitor connection pin
5	5	5	P40	K	General-purpose I/O port
			AN08		A/D converter analog input pin
6	6	6	P41	K	General-purpose I/O port
			AN09		A/D converter analog input pin
—	—	7	NC	—	It is an internally connected pin. Always leave it unconnected.
7	7	8	P42	K	General-purpose I/O port
			AN10		A/D converter analog input pin
8	8	9	P43	K	General-purpose I/O port
			AN11		A/D converter analog input pin
9	9	10	P44	G	General-purpose I/O port
			TO1		16-bit reload timer ch. 0 output pin
10	10	11	P45	G	General-purpose I/O port
			SCK		LIN-UART clock I/O pin
11	11	12	P46	G	General-purpose I/O port
			SOT		LIN-UART data output pin
12	12	13	P47	J	General-purpose I/O port
			SIN		LIN-UART data input pin
13	13	14	P10	G	General-purpose I/O port
			PPG10		8/16-bit PPG ch. 1 output pin
14	14	15	P11	G	General-purpose I/O port
			PPG11		8/16-bit PPG ch. 1 output pin
15	15	16	P12	H	General-purpose I/O port
			DBG		DBG input pin
16	16	17	P13	G	General-purpose I/O port
			PPG00		8/16-bit PPG ch. 0 output pin

(Continued)

Pin no.			Pin name	I/O circuit type*4	Function
LQFP48*1	QFN48*2	LQFP52*3			
17	17	18	P14	G	General-purpose I/O port
			PPG01		8/16-bit PPG ch. 0 output pin
18	18	19	P15	G	General-purpose I/O port
			PPG20		8/16-bit PPG ch. 2 output pin
—	—	20	NC	—	It is an internally connected pin. Always leave it unconnected.
19	19	21	P16	G	General-purpose I/O port
			PPG21		8/16-bit PPG ch. 2 output pin
20	20	22	P17	G	General-purpose I/O port
			SNI0		Trigger input pin for the position detection function of the MPG waveform sequencer
21	21	23	P70	G	General-purpose I/O port
			TO00		8/16-bit composite timer ch. 0 output pin
22	22	24	P71	G	General-purpose I/O port
			TO01		8/16-bit composite timer ch. 0 output pin
23	23	25	P72	I	General-purpose I/O port
			SCL		I^2C clock I/O pin
24	24	26	P73	I	General-purpose I/O port
			SDA		I^2C data I/O pin
25	25	27	P74	G	General-purpose I/O port
			EC0		8/16-bit composite timer ch. 0 clock input pin
26	26	28	P75	G	General-purpose I/O port
			UCK0		UART/SIO ch. 0 clock I/O pin
27	27	29	P76	G	General-purpose I/O port
			UO0		UART/SIO ch. 0 data output pin
28	28	30	P77	J	General-purpose I/O port
			UI0		UART/SIO ch. 0 data input pin
29	29	31	P60	G	General-purpose I/O port
			DTTI		MPG waveform sequencer input pin
30	30	32	P61	G	General-purpose I/O port
			TI1		16-bit reload timer ch. 0 input pin
—	—	33	NC	—	It is an internally connected pin. Always leave it unconnected.
31	31	34	P62	D	General-purpose I/O port High-current pin
			OPT0		MPG waveform sequencer output pin
			PPG00		8/16-bit PPG ch. 0 output pin
			TO10		8/16-bit composite timer ch. 1 output pin

(Continued)

Pin no.			Pin name	I/O circuit type*4	Function
LQFP48*1	QFN48*2	LQFP52*3			
32	32	35	P63	D	General-purpose I/O port High-current pin
			OPT1		MPG waveform sequencer output pin
			PPG01		8/16-bit PPG ch. 0 output pin
			TO11		8/16-bit composite timer ch. 1 output pin
33	33	36	P64	D	General-purpose I/O port High-current pin
			OPT2		MPG waveform sequencer output pin
			PPG10		8/16-bit PPG ch. 1 output pin
			EC1		8/16-bit composite timer ch. 1 clock input pin
34	34	37	P65	D	General-purpose I/O port High-current pin
			OPT3		MPG waveform sequencer output pin
			PPG11		8/16-bit PPG ch. 1 output pin
35	35	38	P66	D	General-purpose I/O port High-current pin
			OPT4		MPG waveform sequencer output pin
			PPG20		8/16-bit PPG ch. 2 output pin
			PPG1		16-bit PPG ch. 1 output pin
36	36	39	P67	D	General-purpose I/O port High-current pin
			OPT5		MPG waveform sequencer output pin
			PPG21		8/16-bit PPG ch. 2 output pin
			TRG1		16-bit PPG ch. 1 trigger input pin
37	37	40	P00	E	General-purpose I/O port
			INT00		External interrupt input pin
			AN00		A/D converter analog input pin
38	38	41	P01	E	General-purpose I/O port
			INT01		External interrupt input pin
			AN01		A/D converter analog input pin
39	39	42	P02	E	General-purpose I/O port
			INT02		External interrupt input pin
			AN02		A/D converter analog input pin
40	40	43	P03	E	General-purpose I/O port
			INT03		External interrupt input pin
			AN03		A/D converter analog input pin

(Continued)

(Continued)

Pin no.			Pin name	I/O circuit type*4	Function
LQFP48*1	QFN48*2	LQFP52*3			
41	41	44	P04	E	General-purpose I/O port
			INT04		External interrupt input pin
			AN04		A/D converter analog input pin
42	42	45	P05	E	General-purpose I/O port
			INT05		External interrupt input pin
			AN05		A/D converter analog input pin
—	—	46	NC	—	It is an internally connected pin. Always leave it unconnected.
43	43	47	P06	E	General-purpose I/O port
			INT06		External interrupt input pin
			AN06		A/D converter analog input pin
44	44	48	P07	E	General-purpose I/O port
			INT07		External interrupt input pin
			AN07		A/D converter analog input pin
45	45	49	PF2	A	General-purpose I/O port
			$\overline{RST}$		Reset pin Dedicated reset pin in MB95F394H/F396H/F398H
46	46	50	PF0	B	General-purpose I/O port
			X0		Main clock I/O oscillation pin
47	47	51	PF1	B	General-purpose I/O port
			X1		Main clock I/O oscillation pin
48	48	52	V_{SS}	—	Power supply pin (GND)

*1: Package code: FPT-48P-M49

*2: Package code: LCC-48P-M11

*3: Package code: FPT-52P-M02

*4: For the I/O circuit types, see “■ I/O CIRCUIT TYPE”.

■ I/O CIRCUIT TYPE

Type	Circuit	Remarks
A	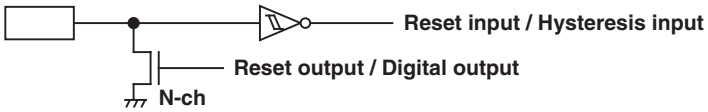	• N-ch open drain output • Hysteresis input • Reset output
B	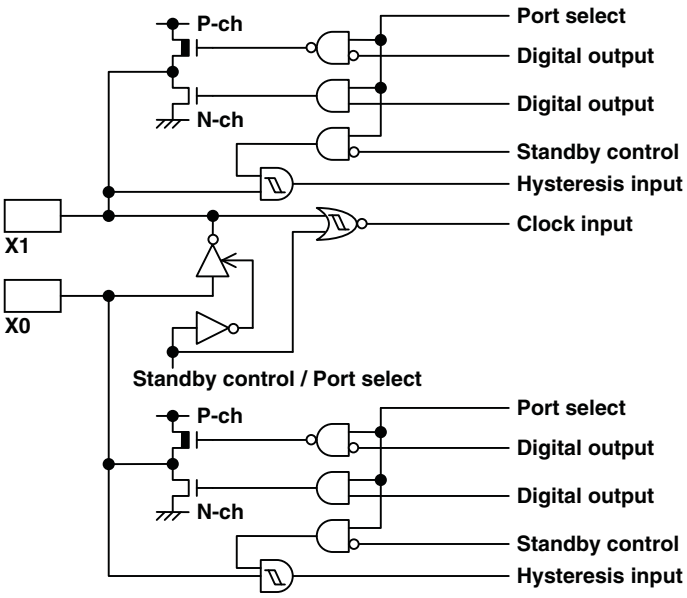	• Oscillation circuit • High-speed side Feedback resistance: approx. 1 MΩ • CMOS output • Hysteresis input
C	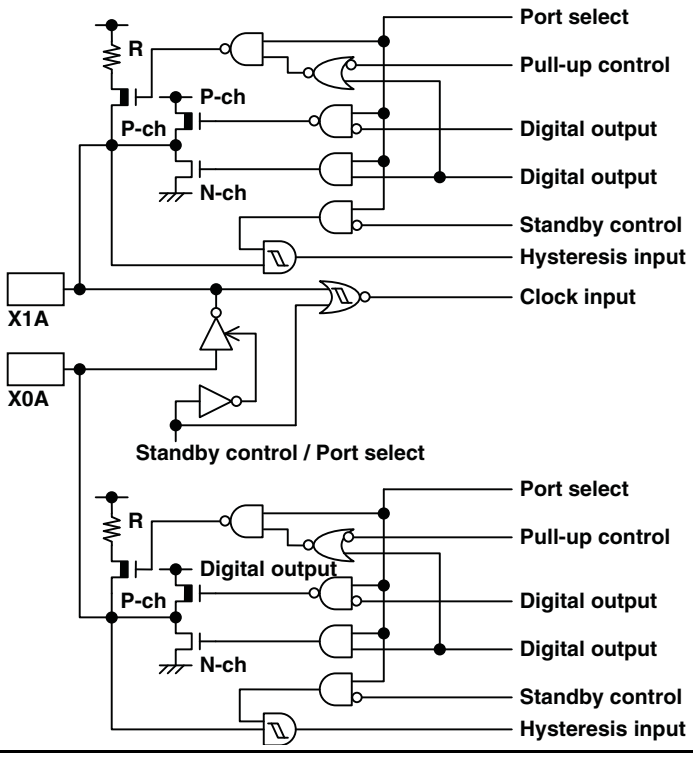	• Oscillation circuit • Low-speed side Feedback resistance: approx.10 MΩ • CMOS output • Hysteresis input • Pull-up control available

(Continued)

Type	Circuit	Remarks
D	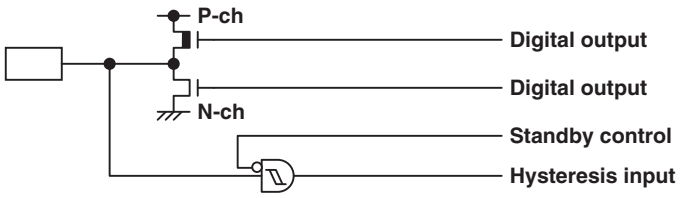	• CMOS output • Hysteresis input • High-current output
E	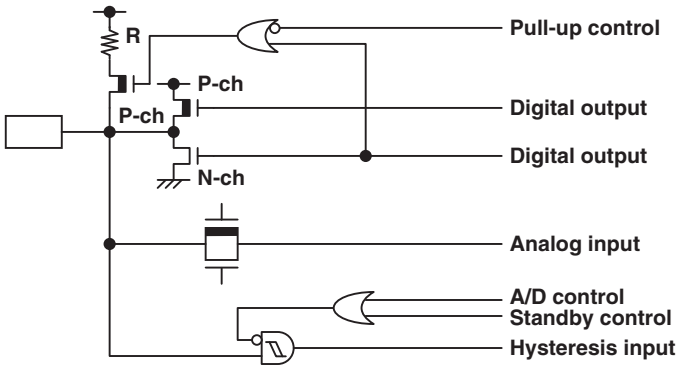	• CMOS output • Hysteresis input • Pull-up control available • Analog input
F	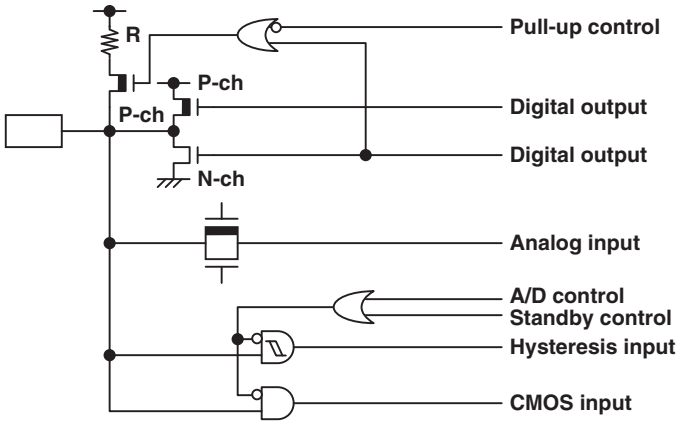	• CMOS output • Hysteresis input • CMOS input • Pull-up control available • Analog input
G	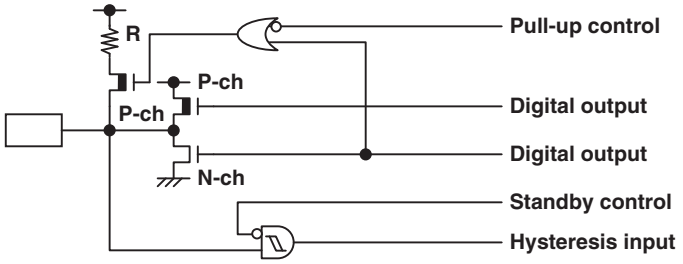	• CMOS output • Hysteresis input • Pull-up control available
H	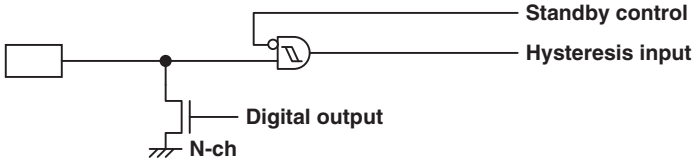	• N-ch open drain output • Hysteresis input

(Continued)

(Continued)

Type	Circuit	Remarks
I	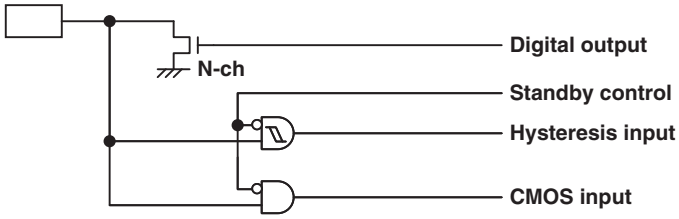	• N-ch open drain output • Hysteresis input • CMOS input
J	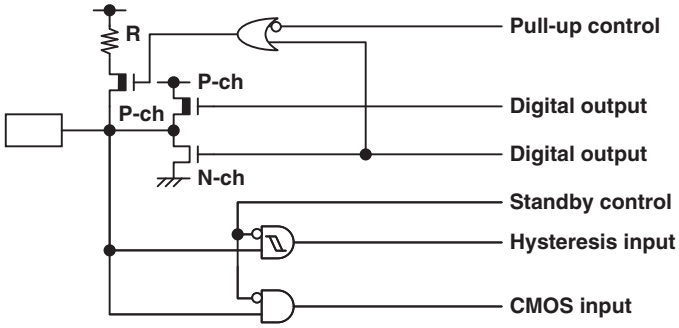	• CMOS output • Hysteresis input • CMOS input • Pull-up control available
K	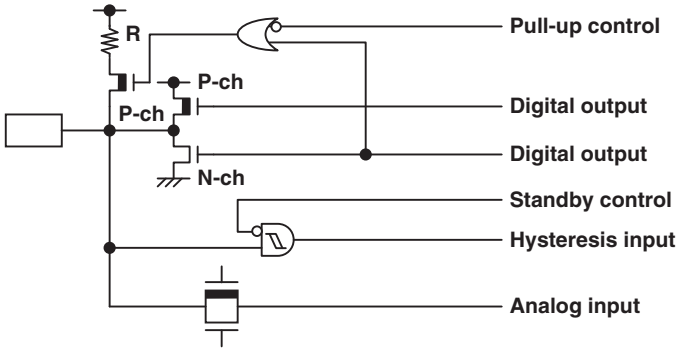	• Hysteresis input • CMOS output • Pull-up control available • Analog input

■ NOTES ON DEVICE HANDLING

• Preventing latch-ups

When using the device, ensure that the voltage applied does not exceed the maximum voltage rating.
In a CMOS IC, if a voltage higher than V_{CC} or a voltage lower than V_{SS} is applied to an input/output pin that is neither a medium-withstand voltage pin nor a high-withstand voltage pin, or if a voltage out of the rating range of power supply voltage mentioned in "1. Absolute Maximum Ratings" of "■ ELECTRICAL CHARACTERISTICS" is applied to the V_{CC} pin or the V_{SS} pin, a latch-up may occur.
When a latch-up occurs, power supply current increases significantly, which may cause a component to be thermally destroyed.

• Stabilizing supply voltage

Supply voltage must be stabilized.
A malfunction may occur when power supply voltage fluctuates rapidly even though the fluctuation is within the guaranteed operating range of the V_{CC} power supply voltage.
As a rule of voltage stabilization, suppress voltage fluctuation so that the fluctuation in V_{CC} ripple (p-p value) at the commercial frequency (50 Hz/60 Hz) does not exceed 10% of the standard V_{CC} value, and the transient fluctuation rate does not exceed 0.1 V/ms at a momentary fluctuation such as switching the power supply.

• Notes on using the external clock

When an external clock is used, oscillation stabilization wait time is required for power-on reset, wake-up from subclock mode or stop mode.

■ PIN CONNECTION

• Treatment of unused pins

If an unused input pin is left unconnected, a component may be permanently damaged due to malfunctions or latch-ups. Always pull up or pull down an unused input pin through a resistor of at least 2 kΩ. Set an unused input/output pin to the output state and leave it unconnected, or set it to the input state and treat it the same as an unused input pin. If there is an unused output pin, leave it unconnected.

• Power supply pins

To reduce unnecessary electro-magnetic emission, prevent malfunctions of strobe signals due to an increase in the ground level, and conform to the total output current standard, always connect the V_{CC} pin and the V_{SS} pin to the power supply and ground outside the device. In addition, connect the current supply source to the V_{CC} pin and the V_{SS} pin with low impedance.
It is also advisable to connect a ceramic capacitor of approximately 0.1 μF as a bypass capacitor between the V_{CC} pin and the V_{SS} pin at a location close to this device.

• DBG pin

Connect the DBG pin directly to an external pull-up resistor.
To prevent the device from unintentionally entering the debug mode due to noise, minimize the distance between the DBG pin and the V_{CC} or V_{SS} pin when designing the layout of the printed circuit board.
The DBG pin should not stay at "L" level after power-on until the reset output is released.

• $\overline{RST}$ pin

Connect the $\overline{RST}$ pin directly to an external pull-up resistor.
To prevent the device from unintentionally entering the reset mode due to noise, minimize the distance between the $\overline{RST}$ pin and the V_{CC} or V_{SS} pin when designing the layout of the printed circuit board.
The $\overline{RST}$/PF2 pin functions as the reset input/output pin after power-on. In addition, the reset output of the $\overline{RST}$/PF2 pin can be enabled by the RSTOE bit in the SYSC register, and the reset input function and the general purpose I/O function can be selected by the RSTEN bit in the SYSC register.

• C pin

Use a ceramic capacitor or a capacitor with equivalent frequency characteristics. The bypass capacitor for the V_{CC} pin must have a capacitance larger than C_S. For the connection to a smoothing capacitor C_S, see the diagram below. To prevent the device from unintentionally entering a mode to which the device is not set to transit due to noise, minimize the distance between the C pin and C_S and the distance between C_S and the V_{SS} pin when designing the layout of a printed circuit board.

• DBG/$\overline{RST}$/C pins connection diagram

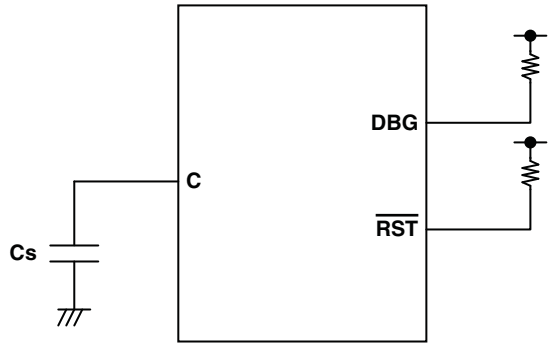

■ BLOCK DIAGRAM

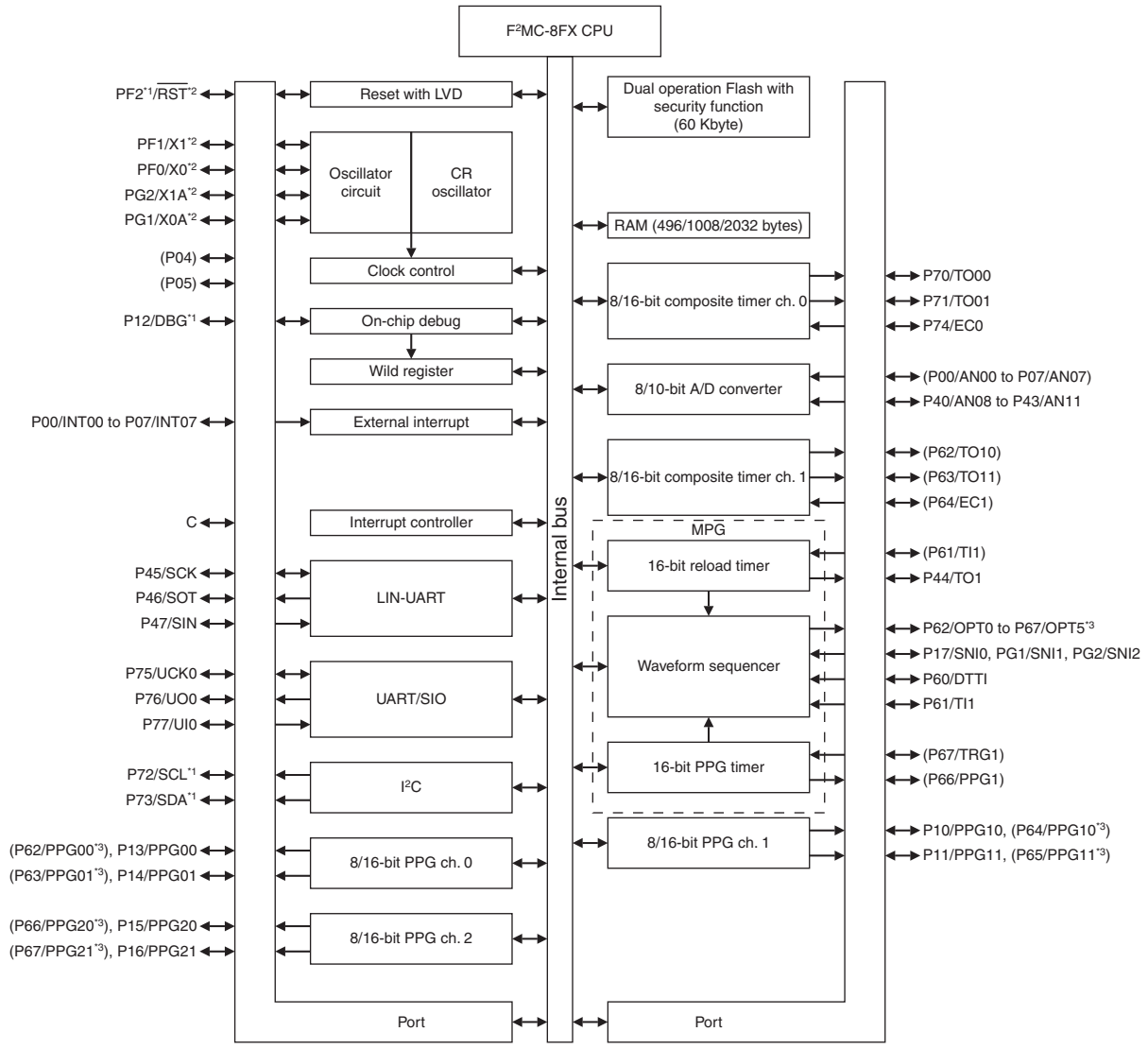

*1: PF2, P12, P72 and P73 are N-ch open drain pins.
*2: Software option
*3: P62 to P67 are high-current pins.

Note: Pins in parentheses indicate that functions of those pins are shared among different resources.

■ CPU CORE

• Memory Space

The memory space of the MB95390H Series is 64 Kbyte in size, and consists of an I/O area, a data area, and a program area. The memory space includes areas intended for specific purposes such as general-purpose registers and a vector table. The memory maps of the MB95390H Series are shown below.

• Memory Maps

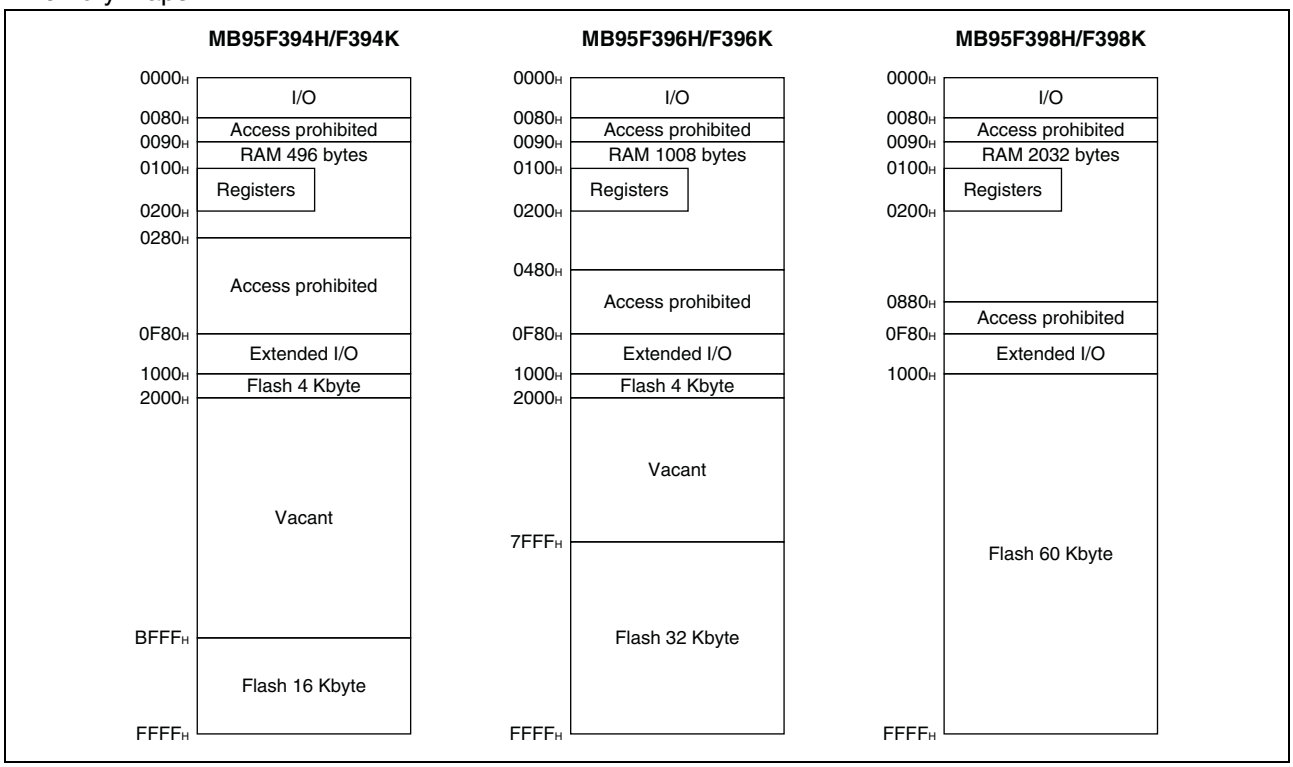

■ I/O MAP

Address	Register abbreviation	Register name	R/W	Initial value
0000_H	PDR0	Port 0 data register	R/W	00000000_B
0001_H	DDR0	Port 0 direction register	R/W	00000000_B
0002_H	PDR1	Port 1 data register	R/W	00000000_B
0003_H	DDR1	Port 1 direction register	R/W	00000000_B
0004_H	—	(Disabled)	—	—
0005_H	WATR	Oscillation stabilization wait time setting register	R/W	11111111_B
0006_H	—	(Disabled)	—	—
0007_H	SYCC	System clock control register	R/W	$0000X011_B$
0008_H	STBC	Standby control register	R/W	$00000XXX_B$
0009_H	RSRR	Reset source register	R/W	XXXXXXXX_B
$000A_H$	TBTC	Time-base timer control register	R/W	00000000_B
$000B_H$	WPCR	Watch prescaler control register	R/W	00000000_B
$000C_H$	WDTC	Watchdog timer control register	R/W	$00XX0000_B$
$000D_H$	SYCC2	System clock control register 2	R/W	$XX100011_B$
$000E_H$ to 0011_H	—	(Disabled)	—	—
0012_H	PDR4	Port 4 data register	R/W	00000000_B
0013_H	PDR4	Port 4 direction register	R/W	00000000_B
0014_H, 0015_H	—	(Disabled)	—	—
0016_H	PDR6	Port 6 data register	R/W	00000000_B
0017_H	DDR6	Port 6 direction register	R/W	00000000_B
0018_H	DDR7	Port 7 data register	R/W	00000000_B
0019_H	DDR7	Port 7 direction register	R/W	00000000_B
$001A_H$ to 0027_H	—	(Disabled)	—	—
0028_H	PDRF	Port F data register	R/W	00000000_B
0029_H	DDRF	Port F direction register	R/W	00000000_B
$002A_H$	PDRG	Port G data register	R/W	00000000_B
$002B_H$	DDRG	Port G direction register	R/W	00000000_B
$002C_H$	PUL0	Port 0 pull-up register	R/W	00000000_B
$002D_H$	PUL1	Port 1 pull-up register	R/W	00000000_B
$002E_H$, $002F_H$	—	(Disabled)	—	—
0030_H	PUL4	Port 4 pull-up register	R/W	00000000_B
0031_H	PUL6	Port 6 pull-up register	R/W	00000000_B
0032_H	PUL7	Port 7 pull-up register	R/W	00000000_B
0033_H, 0034_H	—	(Disabled)	—	—
0035_H	PULG	Port G pull-up register	R/W	00000000_B

(Continued)

Address	Register abbreviation	Register name	R/W	Initial value
0036H	T01CR1	8/16-bit composite timer 01 status control register 1	R/W	00000000B
0037H	T00CR1	8/16-bit composite timer 00 status control register 1	R/W	00000000B
0038H	T11CR1	8/16-bit composite timer 11 status control register 1	R/W	00000000B
0039H	T10CR1	8/16-bit composite timer 10 status control register 1	R/W	00000000B
003AH	PC01	8/16-bit PPG timer 01 control register	R/W	00000000B
003BH	PC00	8/16-bit PPG timer 00 control register	R/W	00000000B
003CH	PC11	8/16-bit PPG timer 11 control register	R/W	00000000B
003DH	PC10	8/16-bit PPG timer 10 control register	R/W	00000000B
003EH	PC21	8/16-bit PPG timer 21 control register	R/W	00000000B
003FH	PC20	8/16-bit PPG timer 20 control register	R/W	00000000B
0040H	TMCSRH1	16-bit reload timer control status register upper	R/W	00000000B
0041H	TMCSRL1	16-bit reload timer control status register lower	R/W	00000000B
0042H, 0043H	—	(Disabled)	—	—
0044H	PCNTH1	16-bit PPG status control register upper	R/W	00000000B
0045H	PCNTL1	16-bit PPG status control register lower	R/W	00000000B
0046H, 0047H	—	(Disabled)	—	—
0048H	EIC00	External interrupt circuit control register ch. 0/ch. 1	R/W	00000000B
0049H	EIC10	External interrupt circuit control register ch. 2/ch. 3	R/W	00000000B
004AH	EIC20	External interrupt circuit control register ch. 4/ch. 5	R/W	00000000B
004BH	EIC30	External interrupt circuit control register ch. 6/ch. 7	R/W	00000000B
004CH to 004FH	—	(Disabled)	—	—
0050H	SCR	LIN-UART serial control register	R/W	00000000B
0051H	SMR	LIN-UART serial mode register	R/W	00000000B
0052H	SSR	LIN-UART serial status register	R/W	00001000B
0053H	RDR/TDR	LIN-UART receive/transmit data register	R/W	00000000B
0054H	ESCR	LIN-UART extended status control register	R/W	00000100B
0055H	ECCR	LIN-UART extended communication control register	R/W	000000XXB
0056H	SMC10	UART/SIO serial mode control register 1	R/W	00000000B
0057H	SMC20	UART/SIO serial mode control register 2	R/W	00100000B
0058H	SSR0	UART/SIO serial status and data register	R/W	00000001B
0059H	TDR0	UART/SIO serial output data register	R/W	00000000B
005AH	RDR0	UART/SIO serial input data register	R	00000000B
005BH to 005FH	—	(Disabled)	—	—

(Continued)

Address	Register abbreviation	Register name	R/W	Initial value
0060H	IBCR00	I²C bus control register 0	R/W	00000000B
0061H	IBCR10	I²C bus control register 1	R/W	00000000B
0062H	IBCR0	I²C bus status register	R/W	00000000B
0063H	IDDR0	I²C data register	R/W	00000000B
0064H	IAAR0	I²C address register	R/W	00000000B
0065H	ICCR0	I²C clock control register	R/W	00000000B
0066H	OPCUR	Output control register (upper)	R/W	00000000B
0067H	OPCLR	Output control register (lower)	R/W	00000000B
0068H	IPCUR	Input control register (upper)	R/W	00000000B
0069H	IPCLR	Input control register (lower)	R/W	00000000B
006AH	NCCR	Noise cancellation control register	R/W	00000000B
006BH	TCSR	Timer control status register	R/W	00000000B
006CH	ADC1	8/10-bit A/D converter control register 1	R/W	00000000B
006DH	ADC2	8/10-bit A/D converter control register 2	R/W	00000000B
006EH	ADDH	8/10-bit A/D converter data register (upper)	R/W	00000000B
006FH	ADDL	8/10-bit A/D converter data register (lower)	R/W	00000000B
0070H	—	(Disabled)	—	—
0071H	FSR2	Flash memory status register 2	R/W	00000000B
0072H	FSR	Flash memory status register	R/W	000X0000B
0073H	SWRE0	Flash memory sector write control register 0	R/W	00000000B
0074H	FSR3	Flash memory status register 3	R	00000000B
0075H	—	(Disabled)	—	—
0076H	WREN	Wild register address compare enable register	R/W	00000000B
0077H	WROR	Wild register data test setting register	R/W	00000000B
0078H	—	Mirror of register bank pointer (RP) and mirror of direct bank pointer (DP)	—	—
0079H	ILR0	Interrupt level setting register 0	R/W	11111111B
007AH	ILR1	Interrupt level setting register 1	R/W	11111111B
007BH	ILR2	Interrupt level setting register 2	R/W	11111111B
007CH	ILR3	Interrupt level setting register 3	R/W	11111111B
007DH	ILR4	Interrupt level setting register 4	R/W	11111111B
007EH	ILR5	Interrupt level setting register 5	R/W	11111111B
007FH	—	(Disabled)	—	—
0F80H	WRARH0	Wild register address setting register (upper) ch. 0	R/W	00000000B
0F81H	WRARL0	Wild register address setting register (lower) ch. 0	R/W	00000000B
0F82H	WRDR0	Wild register data setting register ch. 0	R/W	00000000B

(Continued)

Address	Register abbreviation	Register name	R/W	Initial value
0F83H	WRARH1	Wild register address setting register (upper) ch. 1	R/W	00000000B
0F84H	WRARL1	Wild register address setting register (lower) ch. 1	R/W	00000000B
0F85H	WRDR1	Wild register data setting register ch. 1	R/W	00000000B
0F86H	WRARH2	Wild register address setting register (upper) ch. 2	R/W	00000000B
0F87H	WRARL2	Wild register address setting register (lower) ch. 2	R/W	00000000B
0F88H	WRDR2	Wild register data setting register ch. 2	R/W	00000000B
0F89H to 0F91H	—	(Disabled)	—	—
0F92H	T01CR0	8/16-bit composite timer 01 status control register 0	R/W	00000000B
0F93H	T00CR0	8/16-bit composite timer 00 status control register 0	R/W	00000000B
0F94H	T01DR	8/16-bit composite timer 01 data register	R/W	00000000B
0F95H	T00DR	8/16-bit composite timer 00 data register	R/W	00000000B
0F96H	TMCR0	8/16-bit composite timer 00/01 timer mode control register	R/W	00000000B
0F97H	T11CR0	8/16-bit composite timer 11 status control register 0	R/W	00000000B
0F98H	T10CR0	8/16-bit composite timer 10 status control register 0	R/W	00000000B
0F99H	T11DR	8/16-bit composite timer 11 data register	R/W	00000000B
0F9AH	T10DR	8/16-bit composite timer 10 data register	R/W	00000000B
0F9BH	TMCR1	8/16-bit composite timer 10/11 timer mode control register	R/W	00000000B
0F9CH	PPS01	8/16-bit PPG01 cycle setting buffer register	R/W	11111111B
0F9DH	PPS00	8/16-bit PPG00 cycle setting buffer register	R/W	11111111B
0F9EH	PDS01	8/16-bit PPG01 duty setting buffer register	R/W	11111111B
0F9FH	PDS00	8/16-bit PPG00 duty setting buffer register	R/W	11111111B
0FA0H	PPS11	8/16-bit PPG11 cycle setting buffer register	R/W	11111111B
0FA1H	PPS10	8/16-bit PPG10 cycle setting buffer register	R/W	11111111B
0FA2H	PDS11	8/16-bit PPG11 duty setting buffer register	R/W	11111111B
0FA3H	PDS10	8/16-bit PPG10 duty setting buffer register	R/W	11111111B
0FA4H	PPGS	8/16-bit PPG startup register	R/W	00000000B
0FA5H	REVC	8/16-bit PPG output reverse register	R/W	00000000B
0FA6H	PPS21	8/16-bit PPG21 cycle setting buffer register	R/W	11111111B
0FA7H	PPS20	8/16-bit PPG20 cycle setting buffer register	R/W	11111111B
0FA8H	TMRH1	16-bit reload timer timer register (upper)	R/W	00000000B
	TMRLRH1	16-bit reload timer reload register (upper)		
0FA9H	TMRL1	16-bit reload timer timer register (lower)	R/W	00000000B
	TMRLRL1	16-bit reload timer reload register (lower)		
0FAAH	PDS21	8/16-bit PPG21 duty setting buffer register	R/W	11111111B
0FABH	PDS20	8/16-bit PPG20 duty setting buffer register	R/W	11111111B

(Continued)

Address	Register abbreviation	Register name	R/W	Initial value
0FAC$_H$ to 0FAF$_H$	—	(Disabled)	—	—
0FB0$_H$	PDCRH1	16-bit PPG down counter register (upper)	R	00000000$_B$
0FB1$_H$	PDCRL1	16-bit PPG down counter register (lower)	R	00000000$_B$
0FB2$_H$	PCSRH1	16-bit PPG cycle setting buffer register (upper)	R/W	11111111$_B$
0FB3$_H$	PCSRL1	16-bit PPG cycle setting buffer register (lower)	R/W	11111111$_B$
0FB4$_H$	PDUTH1	16-bit PPG duty setting buffer register (upper)	R/W	11111111$_B$
0FB5$_H$	PDUTL1	16-bit PPG duty setting buffer register (lower)	R/W	11111111$_B$
0FB6$_H$ to 0FBB$_H$	—	(Disabled)	—	—
0FBC$_H$	BGR1	LIN-UART baud rate generator register 1	R/W	00000000$_B$
0FBD$_H$	BGR0	LIN-UART baud rate generator register 0	R/W	00000000$_B$
0FBE$_H$	PSSR0	UART/SIO prescaler select register	R/W	00000000$_B$
0FBF$_H$	BRSR0	UART/SIO baud rate setting register	R/W	00000000$_B$
0FC0$_H$, 0FC1$_H$	—	(Disabled)	—	—
0FC2$_H$	AIDRH	A/D input disable register (upper)	R/W	00000000$_B$
0FC3$_H$	AIDRL	A/D input disable register (lower)	R/W	00000000$_B$
0FC4$_H$	OPDBRH0	Output data buffer register (upper) ch. 0	R/W	00000000$_B$
0FC5$_H$	OPDBRL0	Output data buffer register (lower) ch. 0	R/W	00000000$_B$
0FC6$_H$	OPDBRH1	Output data buffer register (upper) ch. 1	R/W	00000000$_B$
0FC7$_H$	OPDBRL1	Output data buffer register (lower) ch. 1	R/W	00000000$_B$
0FC8$_H$	OPDBRH2	Output data buffer register (upper) ch. 2	R/W	00000000$_B$
0FC9$_H$	OPDBRL2	Output data buffer register (lower) ch. 2	R/W	00000000$_B$
0FCA$_H$	OPDBRH3	Output data buffer register (upper) ch. 3	R/W	00000000$_B$
0FCB$_H$	OPDBRL3	Output data buffer register (lower) ch. 3	R/W	00000000$_B$
0FCC$_H$	OPDBRH4	Output data buffer register (upper) ch. 4	R/W	00000000$_B$
0FCD$_H$	OPDBRL4	Output data buffer register (lower) ch. 4	R/W	00000000$_B$
0FCE$_H$	OPDBRH5	Output data buffer register (upper) ch. 5	R/W	00000000$_B$
0FCF$_H$	OPDBRL5	Output data buffer register (lower) ch. 5	R/W	00000000$_B$
0FD0$_H$	OPDBRH6	Output data buffer register (upper) ch. 6	R/W	00000000$_B$
0FD1$_H$	OPDBRL6	Output data buffer register (lower) ch. 6	R/W	00000000$_B$
0FD2$_H$	OPDBRH7	Output data buffer register (upper) ch. 7	R/W	00000000$_B$
0FD3$_H$	OPDBRL7	Output data buffer register (lower) ch. 7	R/W	00000000$_B$
0FD4$_H$	OPDBRH8	Output data buffer register (upper) ch. 8	R/W	00000000$_B$
0FD5$_H$	OPDBRL8	Output data buffer register (lower) ch. 8	R/W	00000000$_B$
0FD6$_H$	OPDBRH9	Output data buffer register (upper) ch. 9	R/W	00000000$_B$
0FD7$_H$	OPDBRL9	Output data buffer register (lower) ch. 9	R/W	00000000$_B$
0FD8$_H$	OPDBRHA	Output data buffer register (upper) ch. A	R/W	00000000$_B$
0FD9$_H$	OPDBRLA	Output data buffer register (lower) ch. A	R/W	00000000$_B$

(Continued)

(Continued)

Address	Register abbreviation	Register name	R/W	Initial value
0FDA$_H$	OPDBRHB	Output data buffer register (upper) ch. B	R/W	00000000$_B$
0FDB$_H$	OPDBRLB	Output data buffer register (lower) ch. B	R/W	00000000$_B$
0FDC$_H$	OPDUR	Output data register (upper)	R	0000XXXX$_B$
0FDD$_H$	OPDLR	Output data register (lower)	R	XXXXXXXX$_B$
0FDE$_H$	CPCUR	Compare clear register (upper)	R/W	XXXXXXXX$_B$
0FDF$_H$	CPCLR	Compare clear register (lower)	R/W	XXXXXXXX$_B$
0FE0$_H$, 0FE1$_H$	—	(Disabled)	—	—
0FE2$_H$	TMBUR	Timer buffer register (upper)	R	XXXXXXXX$_B$
0FE3$_H$	TMBLR	Timer buffer register (lower)	R	XXXXXXXX$_B$
0FE4$_H$	CRTH	Main CR clock trimming register (upper)	R/W	0XXXXXXX$_B$
0FE5$_H$	CRTL	Main CR clock trimming register (lower)	R/W	00XXXXXX$_B$
0FE6$_H$, 0FE7$_H$	—	(Disabled)	—	—
0FE8$_H$	SYSC	System configuration register	R/W	11000011$_B$
0FE9$_H$	CMCR	Clock monitoring control register	R/W	00000000$_B$
0FEA$_H$	CMDR	Clock monitoring data register	R	00000000$_B$
0FEB$_H$	WDTH	Watchdog timer selection ID register (upper)	R	XXXXXXXX$_B$
0FEC$_H$	WDTL	Watchdog timer selection ID register (lower)	R	XXXXXXXX$_B$
0FED$_H$	—	(Disabled)	—	—
0FEE$_H$	ILSR	Input level select register	R/W	00000000$_B$
0FEF$_H$	WICR	Interrupt pin control register	R/W	01000000$_B$
0FF0$_H$ to 0FFF$_H$	—	(Disabled)	—	—

• R/W access symbols
- R/W : Readable / Writable
- R : Read only
- W : Write only

• Initial value symbols
- 0 : The initial value of this bit is “0”.
- 1 : The initial value of this bit is “1”.
- X : The initial value of this bit is indeterminate.

Note: Do not write to an address that is “(Disabled)”. If a “(Disabled)” address is read, an indeterminate value is returned.

■ INTERRUPT SOURCE TABLE

Interrupt source	Interrupt request number	Vector table address		Bit name of interrupt level setting register	Priority order of interrupt sources of the same level (occurring simultaneously)
		Upper	Lower		
External interrupt ch. 0, ch. 4	IRQ00	FFFA$_H$	FFFB$_H$	L00 [1:0]	High
External interrupt ch. 1, ch. 5	IRQ01	FFF8$_H$	FFF9$_H$	L01 [1:0]	↑
External interrupt ch. 2, ch. 6	IRQ02	FFF6$_H$	FFF7$_H$	L02 [1:0]	
External interrupt ch. 3, ch. 7	IRQ03	FFF4$_H$	FFF5$_H$	L03 [1:0]	
UART/SIO ch. 0, MPG (DTTI)	IRQ04	FFF2$_H$	FFF3$_H$	L04 [1:0]	
8/16-bit composite timer ch. 0 (lower)	IRQ05	FFF0$_H$	FFF1$_H$	L05 [1:0]	
8/16-bit composite timer ch. 0 (upper)	IRQ06	FFEE$_H$	FFEF$_H$	L06 [1:0]	
LIN-UART (reception)	IRQ07	FFEC$_H$	FFED$_H$	L07 [1:0]	
LIN-UART (transmission)	IRQ08	FFEA$_H$	FFEB$_H$	L08 [1:0]	
8/16-bit PPG ch. 1 (lower)	IRQ09	FFE8$_H$	FFE9$_H$	L09 [1:0]	
8/16-bit PPG ch. 1 (upper)	IRQ10	FFE6$_H$	FFE7$_H$	L10 [1:0]	
8/16-bit PPG ch. 2 (upper)	IRQ11	FFE4$_H$	FFE5$_H$	L11 [1:0]	
8/16-bit PPG ch. 0 (upper)	IRQ12	FFE2$_H$	FFE3$_H$	L12 [1:0]	
8/16-bit PPG ch. 0 (lower)	IRQ13	FFE0$_H$	FFE1$_H$	L13 [1:0]	
8/16-bit composite timer ch. 1 (upper)	IRQ14	FFDE$_H$	FFDF$_H$	L14 [1:0]	
8/16-bit PPG ch. 2 (lower)	IRQ15	FFDC$_H$	FFDD$_H$	L15 [1:0]	
16-bit reload timer ch. 1, MPG (write timing/compare clear), I^2C	IRQ16	FFDA$_H$	FFDB$_H$	L16 [1:0]	
16-bit PPG timer ch. 1, MPG (position detection/compare match)	IRQ17	FFD8$_H$	FFD9$_H$	L17 [1:0]	
8/10-bit A/D converter	IRQ18	FFD6$_H$	FFD7$_H$	L18 [1:0]	
Time-base timer	IRQ19	FFD4$_H$	FFD5$_H$	L19 [1:0]	
Watch prescaler	IRQ20	FFD2$_H$	FFD3$_H$	L20 [1:0]	
—	IRQ21	FFD0$_H$	FFD1$_H$	L21 [1:0]	
8/16-bit composite timer ch. 1 (lower)	IRQ22	FFCE$_H$	FFCF$_H$	L22 [1:0]	
Flash memory	IRQ23	FFCC$_H$	FFCD$_H$	L23 [1:0]	Low

■ ELECTRICAL CHARACTERISTICS

1. Absolute Maximum Ratings

Parameter	Symbol	Rating		Unit	Remarks
		Min	Max		
Power supply voltage*1	V_{CC}	V_{SS} – 0.3	V_{SS} + 6	V	
Input voltage*1	V_I	V_{SS} – 0.3	V_{SS} + 6	V	*2
Output voltage*1	V_O	V_{SS} – 0.3	V_{SS} + 6	V	*2
Maximum clamp current	I_{CLAMP}	–2	+2	mA	Applicable to specific pins*3
Total maximum clamp current	$\Sigma\lvert I_{CLAMP}\rvert$	—	20	mA	Applicable to specific pins*3
"L" level maximum output current	I_{OL1}	—	15	mA	Other than P62 to P67
	I_{OL2}	—	15		P62 to P67
"L" level average current	I_{OLAV1}	—	4	mA	Other than P62 to P67 Average output current = operating current × operating ratio (1 pin)
	I_{OLAV2}	—	12		P62 to P67 Average output current = operating current × operating ratio (1 pin)
"L" level total maximum output current	ΣI_{OL}	—	100	mA	
"L" level total average output current	ΣI_{OLAV}	—	50	mA	Total average output current = operating current × operating ratio (Total number of pins)
"H" level maximum output current	I_{OH1}	—	–15	mA	Other than P12, P62 to P67, P72, P73 and PF2
	I_{OH2}	—	–15		P12, P62 to P67, P72, P73 and PF2
"H" level average current	I_{OHAV1}	—	–4	mA	Other than P12, P62 to P67, P72, P73 and PF2 Average output current = operating current × operating ratio (1 pin)
	I_{OHAV2}	—	–8		P12, P62 to P67, P72, P73 and PF2 Average output current = operating current × operating ratio (1 pin)
"H" level total maximum output current	ΣI_{OH}	—	–100	mA	
"H" level total average output current	ΣI_{OHAV}	—	–50	mA	Total average output current = operating current × operating ratio (Total number of pins)
Power consumption	Pd	—	320	mW	
Operating temperature	T_A	–40	+85	°C	
Storage temperature	Tstg	–55	+150	°C	

(Continued)

(Continued)

*1: The parameter is based on V_{SS} = 0.0 V.

*2: V_I and V_O must not exceed V_{CC} + 0.3 V. V_I must not exceed the rated voltage. However, if the maximum current to/from an input is limited by means of an external component, the I_{CLAMP} rating is used instead of the V_I rating.

*3: Applicable to the following pins: P00 to P07, P10, P11, P13 to P17, P40 to P47, P60 to P67, P70, P71, P74 to P77, PF0, PF1, PG1 and PG2
- Use under recommended operating conditions.
- Use with DC voltage (current).
- The HV (High Voltage) signal is an input signal exceeding the V_{CC} voltage. Always connect a limiting resistor between the HV (High Voltage) signal and the microcontroller before applying the HV (High Voltage) signal.
- The value of the limiting resistor should be set to a value at which the current to be input to the microcontroller pin when the HV (High Voltage) signal is input is below the standard value, irrespective of whether the current is transient current or stationary current.
- When the microcontroller drive current is low, such as in low power consumption modes, the HV (High Voltage) input potential may pass through the protective diode to increase the potential of the V_{CC} pin, affecting other devices.
- If the HV (High Voltage) signal is input when the microcontroller power supply is off (not fixed at 0 V), since power is supplied from the pins, incomplete operations may be executed.
- If the HV (High Voltage) input is input after power-on, since power is supplied from the pins, the voltage of power supply may not be sufficient to enable a power-on reset.
- Do not leave the HV (High Voltage) input pin unconnected.
- Example of a recommended circuit

  - Input/Output equivalent circuit

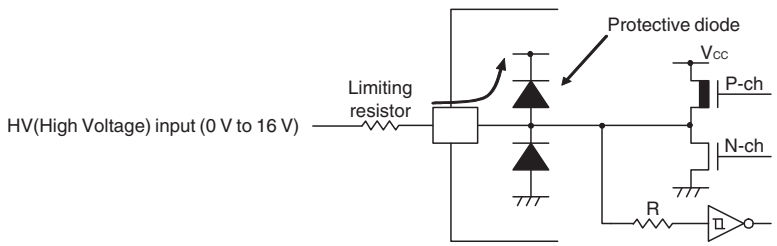

WARNING: Semiconductor devices can be permanently damaged by application of stress (voltage, current, temperature, etc.) in excess of absolute maximum ratings. Do not exceed these ratings.

2. Recommended Operating Conditions

(V_{SS} = 0.0 V)

Parameter	Symbol	Value		Unit	Remarks	
		Min	Max			
Power supply voltage	V_{CC}	2.4*1*2	5.5*1	V	In normal operation	Other than on-chip debug mode
		2.3	5.5		Hold condition in stop mode	
		2.9	5.5		In normal operation	On-chip debug mode
		2.3	5.5		Hold condition in stop mode	
Smoothing capacitor	C_S	0.022	1	μF	*3	
Operating temperature	T_A	–40	+85	°C	Other than on-chip debug mode	
		+5	+35		On-chip debug mode	

*1: The value varies depending on the operating frequency, the machine clock and the analog guaranteed range.

*2: This value becomes 2.88 V when the low-voltage detection reset is used.

*3: Use a ceramic capacitor or a capacitor with equivalent frequency characteristics. The bypass capacitor for the V_{CC} pin must have a capacitance larger than C_S. For the connection to a smoothing capacitor C_S, see the diagram below. To prevent the device from unintentionally entering an unknown mode due to noise, minimize the distance between the C pin and C_S and the distance between C_S and the V_{SS} pin when designing the layout of a printed circuit board.

- DBG / $\overline{RST}$ / C pins connection diagram

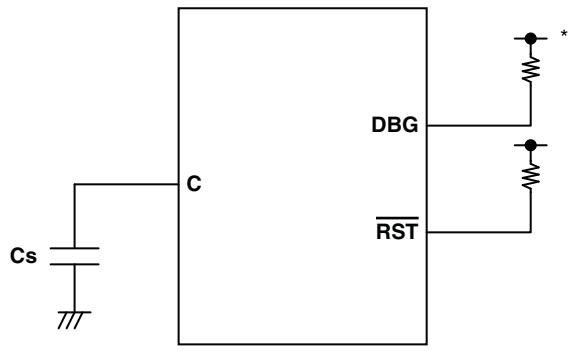

*: Since the DBG pin becomes a communication pin in on-chip debug mode, set a pull-up resistor value suiting the input/output specifications of P12/DBG.

WARNING: The recommended operating conditions are required in order to ensure the normal operation of the semiconductor device. All of the device's electrical characteristics are warranted when the device is operated within these ranges.

Always use semiconductor devices within their recommended operating condition ranges. Operation outside these ranges may adversely affect reliability and could result in device failure.

No warranty is made with respect to uses, operating conditions, or combinations not represented on the data sheet. Users considering application outside the listed conditions are advised to contact their representatives beforehand.

3. DC Characteristics

(V_{CC} = 5.0 V±10%, V_{SS} = 0.0 V, T_A = –40°C to +85°C)

Parameter	Symbol	Pin name	Condition	Value			Unit	Remarks
				Min	Typ*3	Max		
"H" level input voltage	V_{IHI}	P47, P72, P73, P77	*1	0.7 V_{CC}	—	V_{CC} + 0.3	V	When CMOS input level (hysteresis input) is selected
	V_{IHS}	P00 to P07, P10 to P17, P40 to P47, P60 to P67, P70 to P77, PF0, PF1, PG1, PG2	*1	0.8 V_{CC}	—	V_{CC} + 0.3	V	Hysteresis input
	V_{IHM}	PF2	—	0.7 V_{CC}	—	V_{CC} + 0.3	V	Hysteresis input
“L” level input voltage	V_{IL}	P47, P72, P73, P77	*1	V_{SS} – 0.3	—	0.3 V_{CC}	V	When CMOS input level (hysteresis input) is selected
	V_{ILS}	P00 to P07, P10 to P17, P40 to P47, P60 to P67, P70 to P77, PF0, PF1, PG1, PG2	*1	V_{SS} – 0.3	—	0.2 V_{CC}	V	Hysteresis input
	V_{ILM}	PF2	—	V_{SS} – 0.3	—	0.3 V_{CC}	V	Hysteresis input
Open-drain output application voltage	V_D	P12, P72, P73, PF2	—	V_{SS} – 0.3	—	V_{SS} + 5.5	V	
“H” level output voltage	V_{OH1}	Output pins other than P12, P62 to P67, P72, P73, PF2	I_{OH} = –4 mA	V_{CC} – 0.5	—	—	V	
	V_{OH2}	P62 to P67	I_{OH} = –8 mA	V_{CC} – 0.5	—	—	V	
“L” level output voltage	V_{OL1}	Output pins other than P62 to P67	I_{OL} = 4 mA	—	—	0.4	V	
	V_{OL2}	P62 to P67	I_{OL} = 12 mA	—	—	0.4	V	
Input leak current (Hi-Z output leak current)	I_{LI}	All input pins	0.0 V < V_I < V_{CC}	–5	—	+5	μA	When pull-up resistance is disabled
Pull-up resistance	R_{PULL}	P00 to P07, P10, P11, P13 to P17, P40 to P47, P60, P61, P70, P71, P74 to P76, PG1, PG2	V_I = 0 V	25	50	100	kΩ	When pull-up resistance is enabled

(Continued)

(V_{CC} = 5.0 V±10%, V_{SS} = 0.0 V, T_A = –40°C to +85°C)

Parameter	Symbol	Pin name	Condition	Value			Unit	Remarks
				Min	Typ*3	Max		
Input capacitance	C_{IN}	Other than V_{CC} and V_{SS}	f = 1 MHz	—	5	15	pF	
Power supply current*2	I_{CC}	V_{CC} (External clock operation)	V_{CC} = 5.5 V F_{CH} = 32 MHz F_{MP} = 16 MHz Main clock mode (divided by 2)	—	14.8	17	mA	Except during Flash memory writing and erasing
				—	33.5	39.5	mA	During Flash memory writing and erasing
				—	16.6	21	mA	At A/D conversion
	I_{CCS}		V_{CC} = 5.5 V F_{CH} = 32 MHz F_{MP} = 16 MHz Main sleep mode (divided by 2)	—	7	9	mA	
	I_{CCL}		V_{CC} = 5.5 V F_{CL} = 32 kHz F_{MPL} = 16 kHz Subclock mode (divided by 2) T_A = +25°C	—	60	153	μA	
	I_{CCLS}		V_{CC} = 5.5 V F_{CL} = 32 kHz F_{MPL} = 16 kHz Subsleep mode (divided by 2) T_A = +25°C	—	9.4	84	μA	
	I_{CCT}		V_{CC} = 5.5 V F_{CL} = 32 kHz Watch mode Main stop mode T_A = +25°C	—	4.3	30	μA	
	I_{CCMCR}	V_{CC}	V_{CC} = 5.5 V F_{CRH} = 12.5 MHz F_{MP} = 12.5 MHz Main CR clock mode	—	11.8	13.2	mA	
	I_{CCSCR}		V_{CC} = 5.5 V Sub-CR clock mode (divided by 2) T_A = +25°C	—	113	410	μA	

(Continued)

(Continued)

(V_{CC} = 5.0 V±10%, V_{SS} = 0.0 V, T_A = –40°C to +85°C)

Parameter	Symbol	Pin name	Condition	Value			Unit	Remarks
				Min	Typ*3	Max		
Power supply current*2	I_{CCTS}	V_{CC} (External clock operation)	V_{CC} = 5.5 V F_{CH} = 32 MHz Time-base timer mode T_A = +25°C	—	0.9	3	mA	
	I_{CCH}		V_{CC} = 5.5 V Substop mode T_A = +25°C	—	3.4	22.5	µA	
	I_{LVD}	V_{CC}	Current consumption for low-voltage detection circuit only	—	31	54	µA	
	I_{CRH}		Current consumption for the main CR oscillator	—	0.5	0.6	mA	
	I_{CRL}		Current consumption for the sub-CR oscillator oscillating at 100 kHz	—	20	72	µA	

*1: The input levels of P47, P72, P73 and P77 can be switched between “CMOS input level” and “hysteresis input level”. The input level selection register (ILSR) is used to switch between the two input levels.

*2:
- The power supply current is determined by the external clock. When the low-voltage detection option is selected, the power-supply current will be the sum of adding the current consumption of the low-voltage detection circuit (I_{LVD}) to one of the value from I_{CC} to I_{CCH}. In addition, when both the low-voltage detection option and the CR oscillator are selected, the power supply current will be the sum of adding up the current consumption of the low-voltage detection circuit, the current consumption of the CR oscillators (I_{CRH}, I_{CRL}) and a specified value. In on-chip debug mode, the CR oscillator (I_{CRH}) and the low-voltage detection circuit are always enabled, and current consumption therefore increases accordingly.
- See "4. AC Characteristics: (1) Clock Timing" for F_{CH} and F_{CL}.
- See "4. AC Characteristics: (2) Source Clock/Machine Clock" for F_{MP} and F_{MPL}.

*3: V_{CC} = 5.0 V, T_A = 25°C

4. AC Characteristics

(1) Clock Timing

(V_{CC} = 2.4 V to 5.5 V, V_{SS} = 0.0 V, T_A = –40°C to +85°C)

Parameter	Symbol	Pin name	Condition	Value			Unit	Remarks
				Min	Typ	Max		
Clock frequency	F_{CH}	X0, X1	—	1	—	16.25	MHz	When the main oscillation circuit is used
		X0	X1: open	1	—	12	MHz	When the main external clock is used
		X0, X1	*1	1	—	32.5	MHz	
	F_{CRH}	—	—	12.25	12.5	12.75	MHz	When the main CR clock is used*2
				9.80	10	10.20	MHz	
				7.84	8	8.16	MHz	
				0.98	1	1.02	MHz	
				12.18	12.5	12.82	MHz	When the main CR clock is used*3
				9.75	10	10.25	MHz	
				7.80	8	8.20	MHz	
				0.97	1	1.03	MHz	
	F_{CL}	X0A, X1A	—	—	32.768	—	kHz	When the sub-oscillation circuit is used
				—	32.768	—	kHz	When the sub-external clock is used
	F_{CRL}	—	—	50	100	200	kHz	When the sub-CR clock is used
Clock cycle time	t_{HCYL}	X0, X1	—	61.5	—	1000	ns	When the main oscillation circuit is used
		X0	X1: open	83.4	—	1000	ns	When the external clock is used
		X0, X1	*1	30.8	—	1000	ns	
	t_{LCYL}	X0A, X1A	—	—	30.5	—	μs	When the subclock is used
Input clock pulse width	t_{WH1} t_{WL1}	X0	X1: open	33.4	—	—	ns	When the external clock is used, the duty ratio should range between 40% and 60%.
		X0, X1	*1	12.4	—	—	ns	
	t_{WH2} t_{WL2}	X0A	—	—	15.2	—	μs	
Input clock rise time and fall time	t_{CR} t_{CF}	X0	X1: open	—	—	5	ns	When the external clock is used
		X0, X1	*1	—	—	5	ns	
CR oscillation start time	t_{CRHWK}	—	—	—	—	80	μs	When the main CR clock is used
	t_{CRLWK}	—	—	—	—	10	μs	When the sub-CR clock is used

*1: The external clock signal is input to X0 and the inverted external clock signal to X1.

*2: These specifications are only applicable to a product in LQFP package (FPT-48P-M49 or FPT-52P-M02).

*3: These specifications are only applicable to a product in QFN package (LCC-48P-M11).

- Input waveform generated when an external clock (main clock) is used

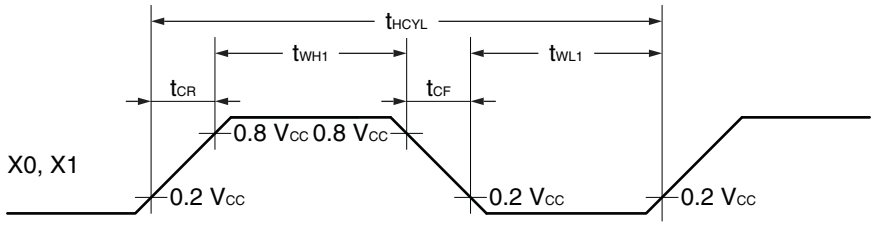

- Figure of main clock input port external connection

When a crystal oscillator or a ceramic oscillator is used

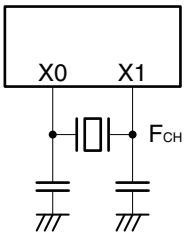

When the external clock is used (X1 is open)

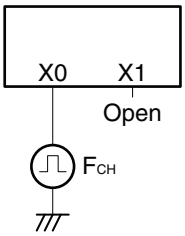

When the external clock is used

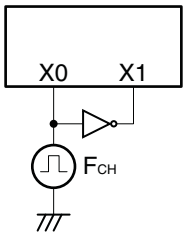

- Input waveform generated when an external clock (subclock) is used

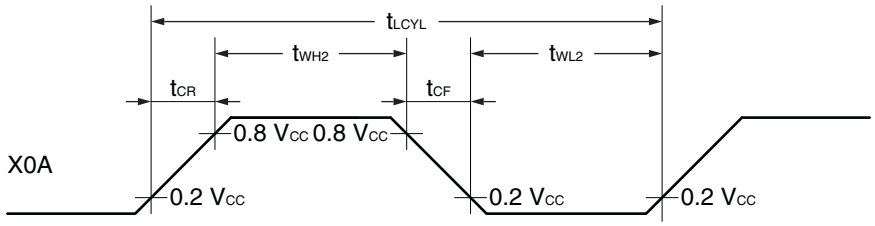

- Figure of subclock input port external connection

When a crystal oscillator or a ceramic oscillator is used

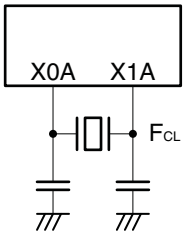

When the external clock is used

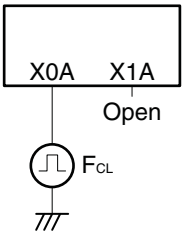

(2) Source Clock/Machine Clock

(V_{CC} = 5.0 V±10%, V_{SS} = 0.0 V, T_A = –40°C to +85°C)

Parameter	Symbol	Pin name	Value			Unit	Remarks
			Min	Typ	Max		
Source clock cycle time*1	t_{SCLK}	—	61.5	—	2000	ns	When the main external clock is used Min: F_{CH} = 32.5 MHz, divided by 2 Max: F_{CH} = 1 MHz, divided by 2
			80	—	1000	ns	When the main CR clock is used Min: F_{CRH} = 12.5 MHz Max: F_{CRH} = 1 MHz
			—	61	—	μs	When the sub-oscillation clock is used F_{CL} = 32.768 kHz, divided by 2
			—	20	—	μs	When the sub-CR clock is used F_{CRL} = 100 kHz, divided by 2
Source clock frequency	F_{SP}	—	0.5	—	16.25	MHz	When the main oscillation clock is used
			1	—	12.5	MHz	When the main CR clock is used
	F_{SPL}		—	16.384	—	kHz	When the sub-oscillation clock is used
			—	50	—	kHz	When the sub-CR clock is used F_{CRL} = 100 kHz, divided by 2
Machine clock cycle time*2 (minimum instruction execution time)	t_{MCLK}	—	61.5	—	32000	ns	When the main oscillation clock is used Min: F_{SP} = 16.25 MHz, no division Max: F_{SP} = 0.5 MHz, divided by 16
			80	—	16000	ns	When the main CR clock is used Min: F_{SP} = 12.5 MHz Max: F_{SP} = 1 MHz, divided by 16
			61	—	976.5	μs	When the sub-oscillation clock is used Min: F_{SPL} = 16.384 kHz, no division Max: F_{SPL} = 16.384 kHz, divided by 16
			20	—	320	μs	When the sub-CR clock is used Min: F_{SPL} = 50 kHz, no division Max: F_{SPL} = 50 kHz, divided by 16
Machine clock frequency	F_{MP}	—	0.031	—	16.25	MHz	When the main oscillation clock is used
			0.0625	—	12.5	MHz	When the main CR clock is used
	F_{MPL}		1.024	—	16.384	kHz	When the sub-oscillation clock is used
			3.125	—	50	kHz	When the sub-CR clock is used F_{CRL} = 100 kHz

*1: This is the clock before it is divided according to the division ratio set by the machine clock divide ratio select bits (SYCC:DIV1, DIV0). This source clock is divided to become a machine clock according to the divide ratio set by the machine clock divide ratio select bits (SYCC:DIV1, DIV0). In addition, a source clock can be selected from the following.

- Main clock divided by 2
- Main CR clock
- Subclock divided by 2
- Sub-CR clock divided by 2

*2: This is the operating clock of the microcontroller. A machine clock can be selected from the following.

- Source clock (no division)
- Source clock divided by 4
- Source clock divided by 8
- Source clock divided by 16

- Schematic diagram of the clock generation block

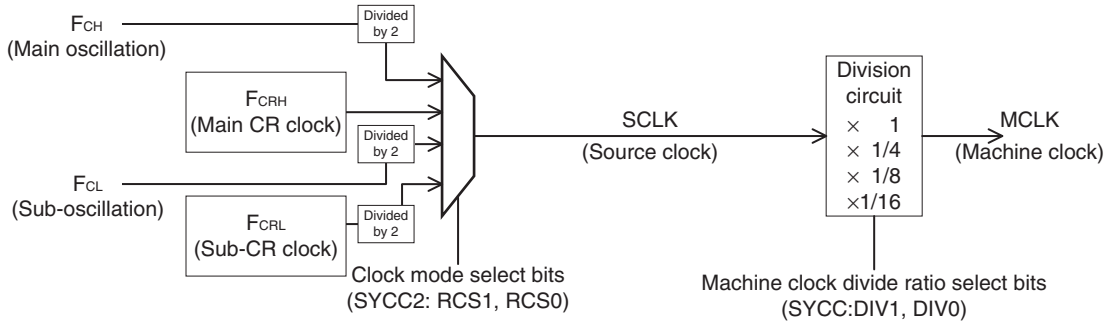

- Operating voltage - Operating frequency (When T_A = –40°C to +85°C)
  MB95390H (without the on-chip debug function)

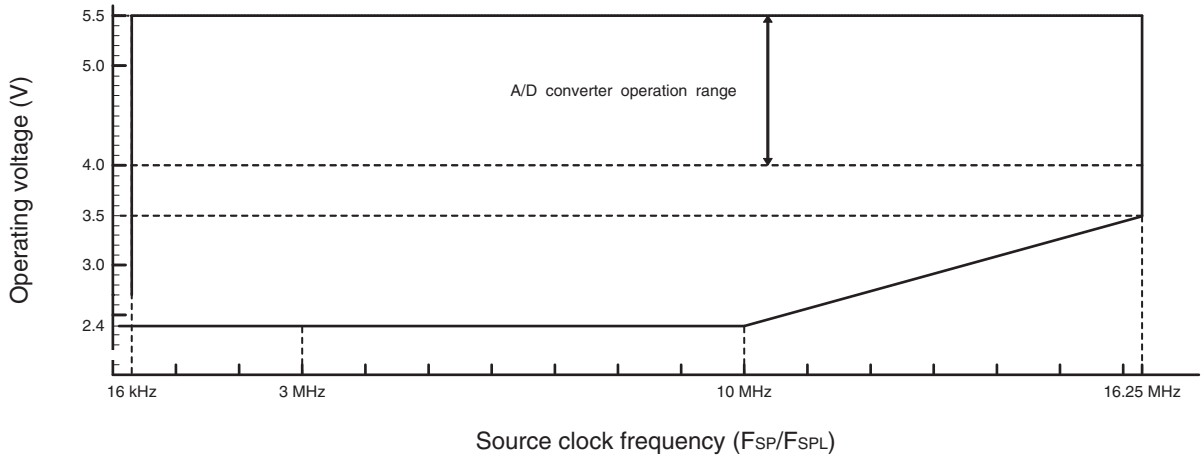

- Operating voltage - Operating frequency (When T_A = –40°C to +85°C)
  MB95390H (with the on-chip debug function)

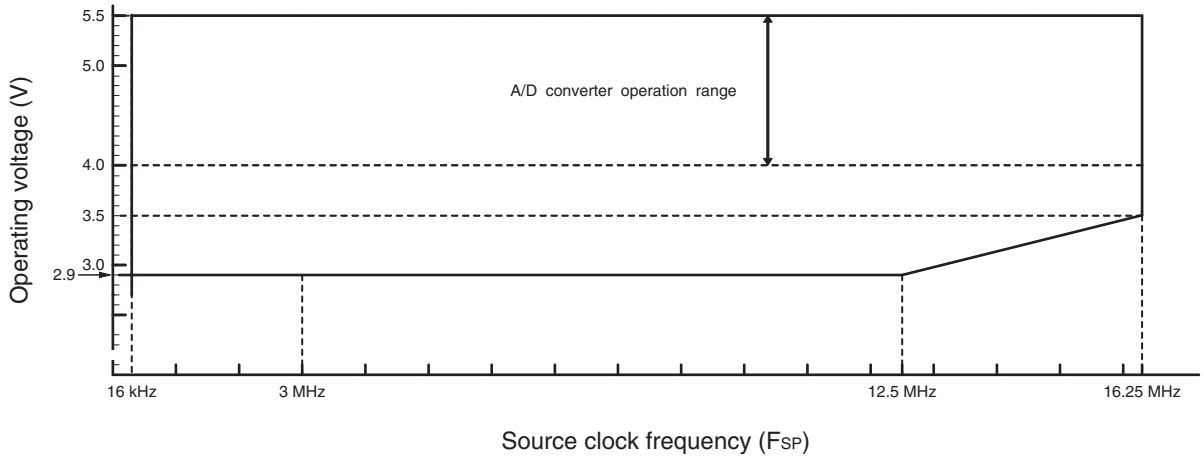

(3) External Reset

(V_{CC} = 5.0 V±10%, V_{SS} = 0.0 V, T_A = –40°C to +85°C)

Parameter	Symbol	Value		Unit	Remarks
		Min	Max		
$\overline{RST}$ "L" level pulse width	t_{RSTL}	2 t_{MCLK}*1	—	ns	In normal operation
		Oscillation time of the oscillator*2 + 100	—	µs	In stop mode, subclock mode, subsleep mode, watch mode, and power-on
		100	—	µs	In time-base timer mode

*1: See "(2) Source Clock/Machine Clock" for t_{MCLK}.

*2: The oscillation time of an oscillator is the time for it to reach 90% of its amplitude. The crystal oscillator has an oscillation time of between several ms and tens of ms. The ceramic oscillator has an oscillation time of between hundreds of µs and several ms. The external clock has an oscillation time of 0 ms. The CR oscillator clock has an oscillation time of between several µs and several ms.

- In normal operation

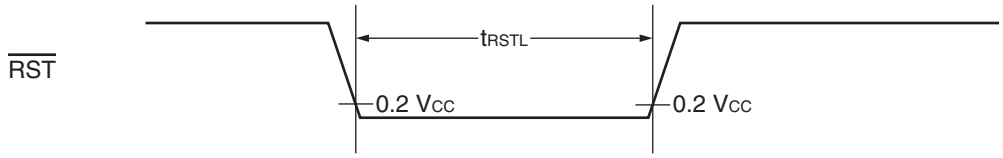

- In stop mode, subclock mode, subsleep mode, watch mode and power-on

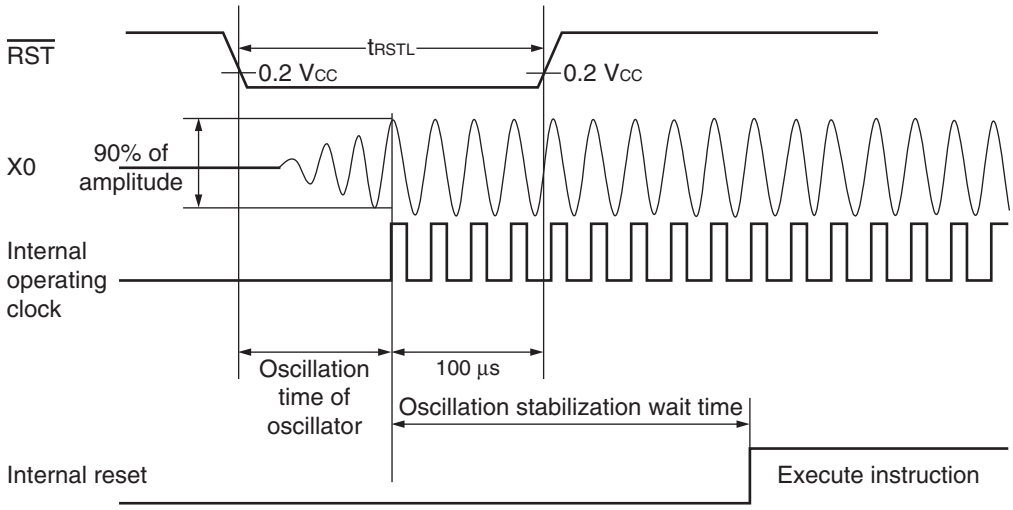

(4) Power-on Reset

(V_{SS} = 0.0 V, T_A = –40°C to +85°C)

Parameter	Symbol	Condition	Value		Unit	Remarks
			Min	Max		
Power supply rising time	t_R	—	—	50	ms	
Power supply cutoff time	t_{OFF}	—	1	—	ms	Wait time until power-on

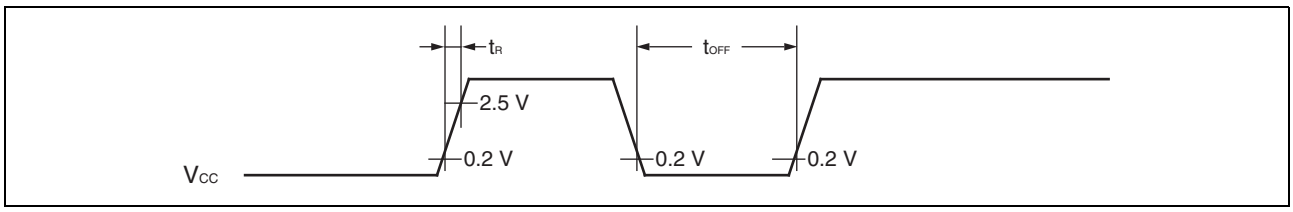

Note: A sudden change of power supply voltage may activate the power-on reset function. When changing the power supply voltage during the operation, set the slope of rising to a value below within 30 mV/ms as shown below.

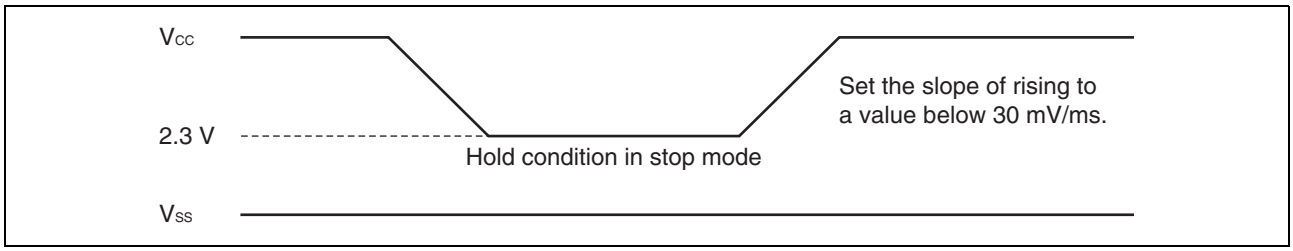

(5) Peripheral Input Timing

(V_{CC} = 5.0 V±10%, V_{SS} = 0.0 V, T_A = –40°C to +85°C)

Parameter	Symbol	Pin name	Value		Unit
			Min	Max	
Peripheral input “H” pulse width	t_{ILIH}	INT00 to INT07, EC0, EC1,TI1, TRG1	2 t_{MCLK}*	—	ns
Peripheral input “L” pulse width	t_{IHIL}		2 t_{MCLK}*	—	ns

*: See “(2) Source Clock/Machine Clock” for t_{MCLK}.

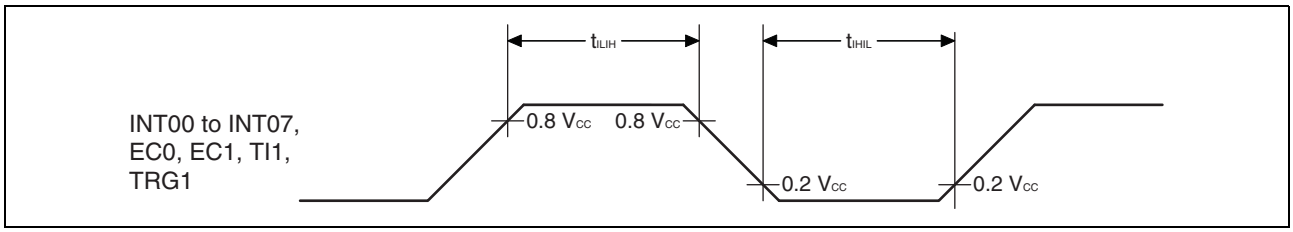

(6) LIN-UART Timing

Sampling is executed at the rising edge of the sampling clock*1, and serial clock delay is disabled*2. (ESCR register: SCES bit = 0, ECCR register: SCDE bit = 0)

(V_{CC} = 5.0 V±10%, AV_{SS} = V_{SS} = 0.0 V, T_A = –40°C to +85°C)

Parameter	Symbol	Pin name	Condition	Value		Unit
				Min	Max	
Serial clock cycle time	t_{SCYC}	SCK	Internal clock operation output pin: C_L = 80 pF + 1 TTL	5 t_{MCLK}*3	—	ns
SCK ↓ → SOT delay time	t_{SLOVI}	SCK, SOT		–95	+95	ns
Valid SIN → SCK ↑	t_{IVSHI}	SCK, SIN		t_{MCLK}*3 + 190	—	ns
SCK ↑ → valid SIN hold time	t_{SHIXI}	SCK, SIN		0	—	ns
Serial clock “L” pulse width	t_{SLSH}	SCK	External clock operation output pin: C_L = 80 pF + 1 TTL	3 t_{MCLK}*3 – t_R	—	ns
Serial clock “H” pulse width	t_{SHSL}	SCK		t_{MCLK}*3 + 95	—	ns
SCK ↓ → SOT delay time	t_{SLOVE}	SCK, SOT		—	2 t_{MCLK}*3 + 95	ns
Valid SIN → SCK ↑	t_{IVSHE}	SCK, SIN		190	—	ns
SCK ↑ → valid SIN hold time	t_{SHIXE}	SCK, SIN		t_{MCLK}*3 + 95	—	ns
SCK fall time	t_F	SCK		—	10	ns
SCK rise time	t_R	SCK		—	10	ns

*1: There is a function used to choose whether the sampling of reception data is performed at a rising edge or a falling edge of the serial clock.

*2: The serial clock delay function is a function used to delay the output signal of the serial clock for half the clock.

*3: See “(2) Source Clock/Machine Clock” for t_{MCLK}.

- Internal shift clock mode

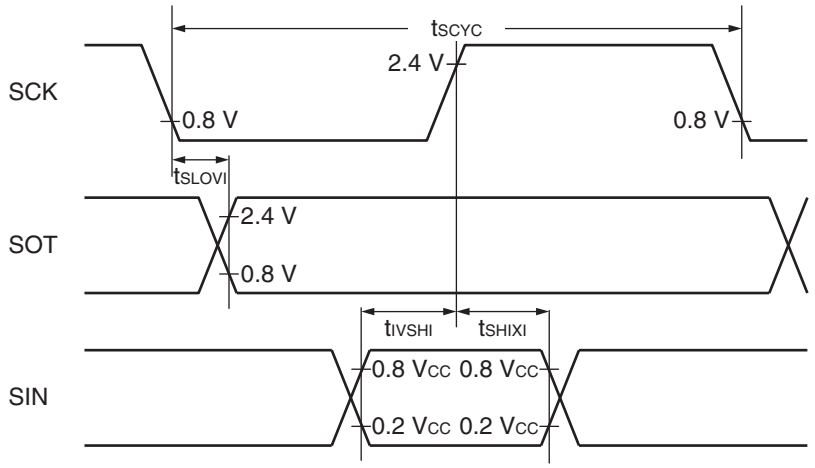

- External shift clock mode

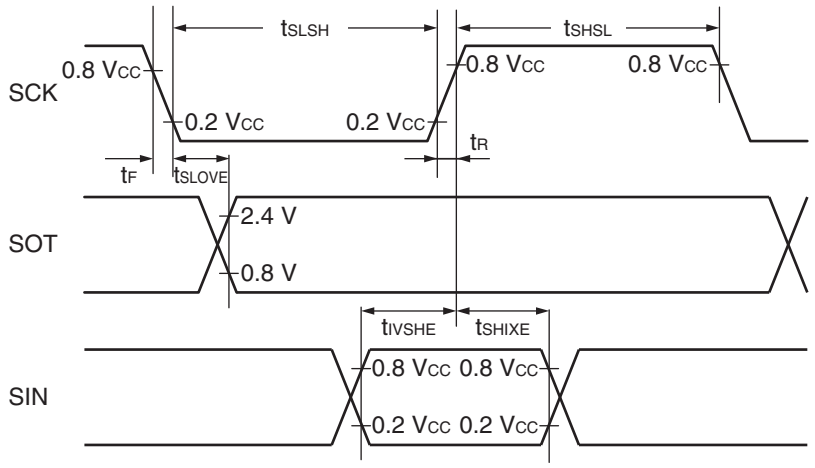

Sampling is executed at the falling edge of the sampling clock*1, and serial clock delay is disabled*2. (ESCR register: SCES bit = 1, ECCR register: SCDE bit = 0)

(V_{CC} = 5.0 V±10%, V_{SS} = 0.0 V, T_A = –40°C to +85°C)

Parameter	Symbol	Pin name	Condition	Value		Unit
				Min	Max	
Serial clock cycle time	t_{SCYC}	SCK	Internal clock operation output pin: C_L = 80 pF + 1 TTL	5 t_{MCLK}*3	—	ns
SCK ↑ → SOT delay time	t_{SHOVI}	SCK, SOT		–95	+95	ns
Valid SIN → SCK ↓	t_{IVSLI}	SCK, SIN		t_{MCLK}*3 + 190	—	ns
SCK ↓ → valid SIN hold time	t_{SLIXI}	SCK, SIN		0	—	ns
Serial clock “H” pulse width	t_{SHSL}	SCK	External clock operation output pin: C_L = 80 pF + 1 TTL	3 t_{MCLK}*3 – t_R	—	ns
Serial clock “L” pulse width	t_{SLSH}	SCK		t_{MCLK}*3 + 95	—	ns
SCK ↑ → SOT delay time	t_{SHOVE}	SCK, SOT		—	2 t_{MCLK}*3 + 95	ns
Valid SIN → SCK ↓	t_{IVSLE}	SCK, SIN		190	—	ns
SCK ↓ → valid SIN hold time	t_{SLIXE}	SCK, SIN		t_{MCLK}*3 + 95	—	ns
SCK fall time	t_F	SCK		—	10	ns
SCK rise time	t_R	SCK		—	10	ns

*1: There is a function used to choose whether the sampling of reception data is performed at a rising edge or a falling edge of the serial clock.

*2: The serial clock delay function is a function used to delay the output signal of the serial clock for half the clock.

*3: See “(2) Source Clock/Machine Clock” for t_{MCLK}.

- Internal shift clock mode

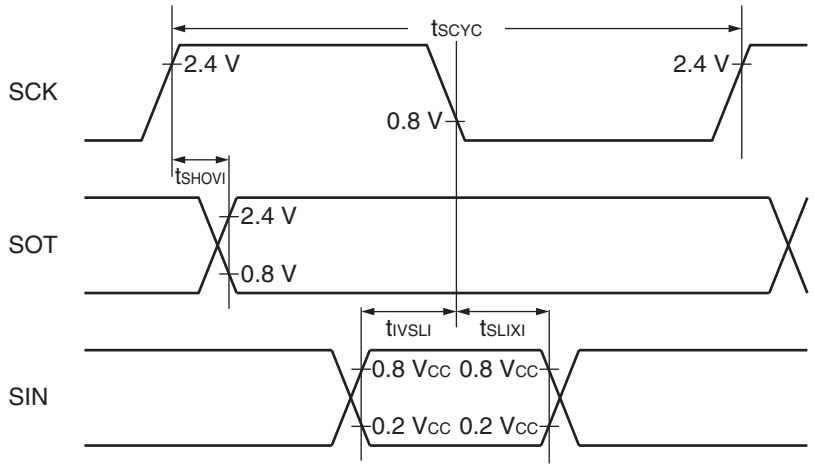

- External shift clock mode

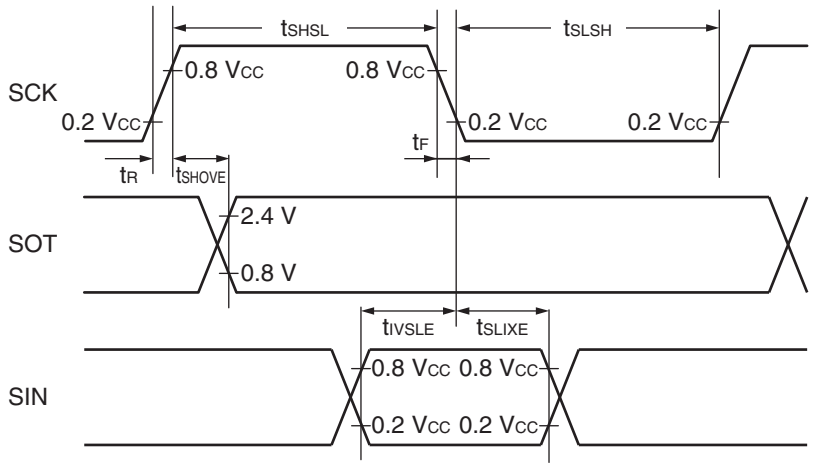

Sampling is executed at the rising edge of the sampling clock*1, and serial clock delay is enabled*2. (ESCR register: SCES bit = 0, ECCR register: SCDE bit = 1)

(V_{CC} = 5.0 V±10%, V_{SS} = 0.0 V, T_A = –40°C to +85°C)

Parameter	Symbol	Pin name	Condition	Value		Unit
				Min	Max	
Serial clock cycle time	t_{SCYC}	SCK	Internal clock operation output pin: C_L = 80 pF + 1 TTL	5 t_{MCLK}*3	—	ns
SCK ↑ → SOT delay time	t_{SHOVI}	SCK, SOT		–95	+95	ns
Valid SIN → SCK ↓	t_{IVSLI}	SCK, SIN		t_{MCLK}*3 + 190	—	ns
SCK ↓ → valid SIN hold time	t_{SLIXI}	SCK, SIN		0	—	ns
SOT → SCK ↓ delay time	t_{SOVLI}	SCK, SOT		—	4 t_{MCLK}*3	ns

*1: There is a function used to choose whether the sampling of reception data is performed at a rising edge or a falling edge of the serial clock.

*2: The serial clock delay function is a function that delays the output signal of the serial clock for half clock.

*3: See “(2) Source Clock/Machine Clock” for t_{MCLK}.

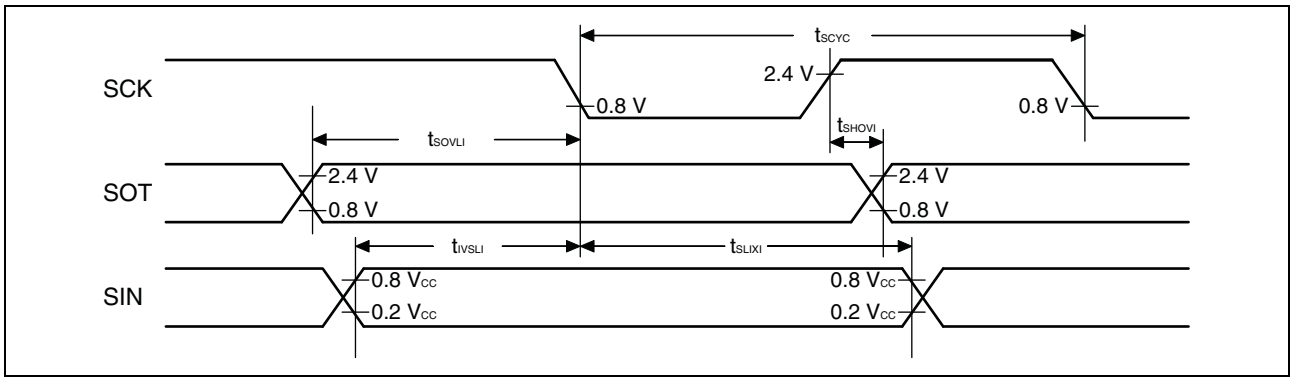

Sampling is executed at the falling edge of the sampling clock*1, and serial clock delay is enabled*2. (ESCR register: SCES bit = 1, ECCR register: SCDE bit = 1)

(V_{CC} = 5.0 V±10%, V_{SS} = 0.0 V, T_A = –40°C to +85°C)

Parameter	Symbol	Pin name	Condition	Value		Unit
				Min	Max	
Serial clock cycle time	t_{SCYC}	SCK	Internal clock operation output pin: C_L = 80 pF + 1 TTL	5 t_{MCLK}*3	—	ns
SCK ↓ → SOT delay time	t_{SLOVI}	SCK, SOT		–95	+95	ns
Valid SIN → SCK ↑	t_{IVSHI}	SCK, SIN		t_{MCLK}*3 + 190	—	ns
SCK ↑ → valid SIN hold time	t_{SHIXI}	SCK, SIN		0	—	ns
SOT → SCK ↑ delay time	t_{SOVHI}	SCK, SOT		—	4 t_{MCLK}*3	ns

*1: There is a function used to choose whether the sampling of reception data is performed at a rising edge or a falling edge of the serial clock.

*2: The serial clock delay function is a function that delays the output signal of the serial clock for half clock.

*3: See “(2) Source Clock/Machine Clock” for t_{MCLK}.

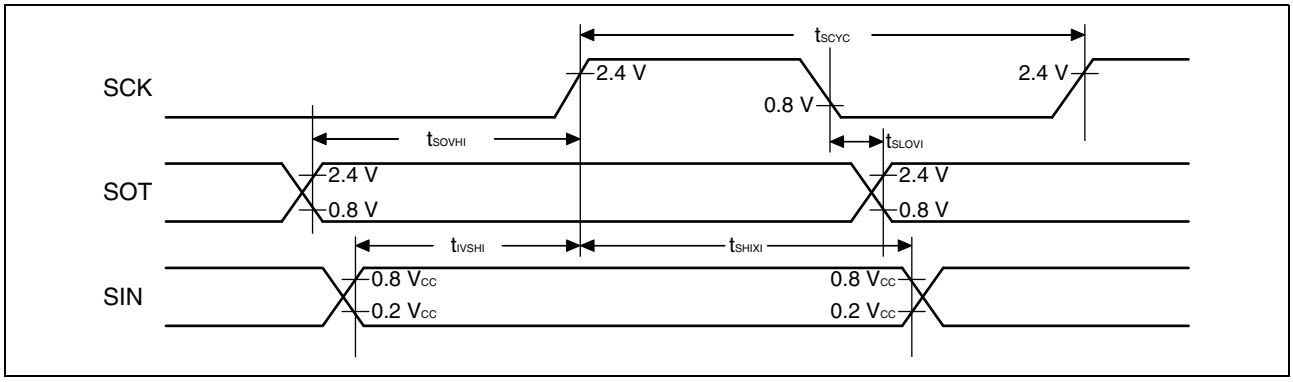

(7) Low-voltage Detection

(V_{SS} = 0.0 V, T_A = –40°C to +85°C)

Parameter	Symbol	Value			Unit	Remarks
		Min	Typ	Max		
Release voltage	V_{DL+}	2.52	2.7	2.88	V	At power supply rise
Detection voltage	V_{DL-}	2.42	2.6	2.78	V	At power supply fall
Hysteresis width	V_{HYS}	70	100	—	mV	
Power supply start voltage	V_{off}	—	—	2.3	V	
Power supply end voltage	V_{on}	4.9	—	—	V	
Power supply voltage change time (at power supply rise)	t_r	3000	—	—	μs	Slope of power supply that the reset release signal generates within the rating (V_{DL+})
Power supply voltage change time (at power supply fall)	t_f	300	—	—	μs	Slope of power supply that the reset detection signal generates within the rating (V_{DL-})
Reset release delay time	t_{d1}	—	—	300	μs	
Reset detection delay time	t_{d2}	—	—	20	μs	

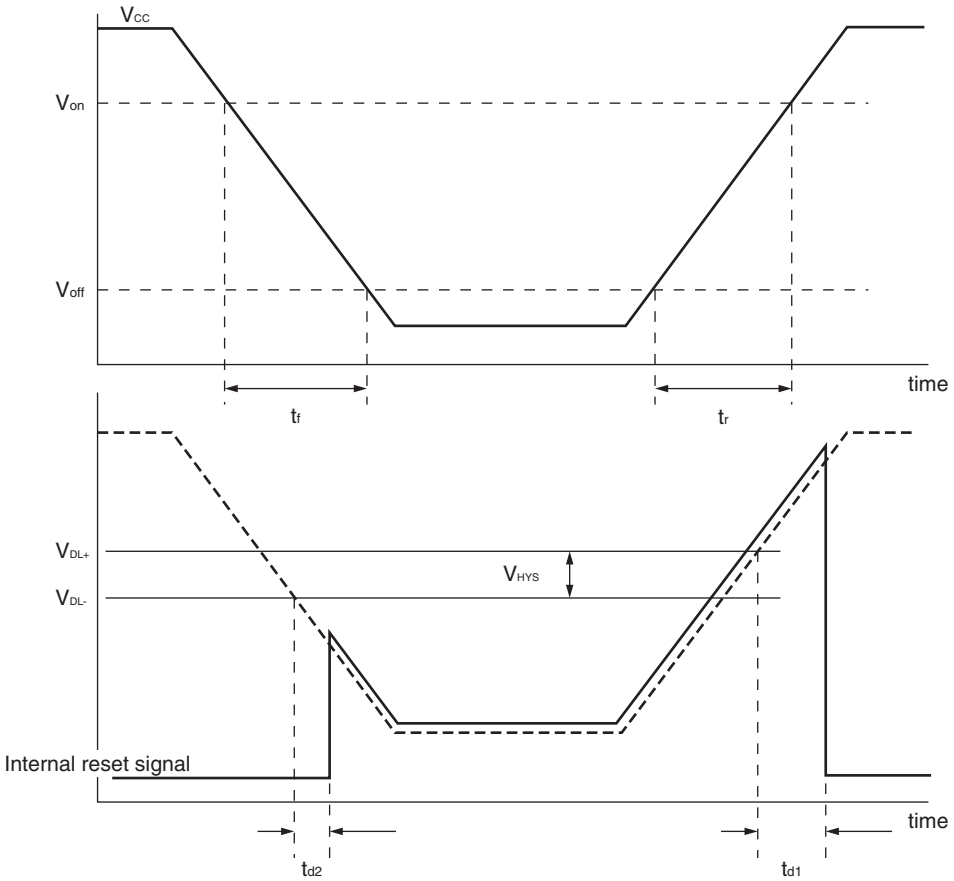

(8) I²C Timing

(V_{CC} = 5.0 V±10%, AV_{SS} = V_{SS} = 0.0 V, T_A = –40°C to +85°C)

Parameter	Symbol	Pin name	Condition	Value				Unit
				Standard-mode		Fast-mode		
				Min	Max	Min	Max	
SCL clock frequency	f_{SCL}	SCL	R = 1.7 kΩ, C = 50 pF*1	0	100	0	400	kHz
(Repeated) START condition hold time SDA ↓ → SCL ↓	$t_{HD;STA}$	SCL, SDA		4.0	—	0.6	—	μs
SCL clock "L" width	t_{LOW}	SCL		4.7	—	1.3	—	μs
SCL clock "H" width	t_{HIGH}	SCL		4.0	—	0.6	—	μs
(Repeated) START condition setup time SCL ↑ → SDA ↓	$t_{SU;STA}$	SCL, SDA		4.7	—	0.6	—	μs
Data hold time SCL ↓ → SDA ↓↑	$t_{HD;DAT}$	SCL, SDA		0	3.45*2	0	0.9*3	μs
Data setup time SDA ↓↑ → SCL ↑	$t_{SU;DAT}$	SCL, SDA		0.25	—	0.1	—	μs
STOP condition setup time SCL ↑ → SDA ↑	$t_{SU;STO}$	SCL, SDA		4	—	0.6	—	μs
Bus free time between STOP condition and START condition	t_{BUF}	SCL, SDA		4.7	—	1.3	—	μs

*1: R represents the pull-up resistor of the SCL and SDA lines, and C the load capacitor of the SCL and SDA lines.

*2: The maximum $t_{HD;DAT}$ in the Standard-mode is applicable only when the time during which the device is holding the SCL signal at "L" (t_{LOW}) does not extend.

*3: A Fast-mode I²C-bus device can be used in a Standard-mode I²C-bus system, provided that the condition of $t_{SU;DAT}$ ≥ 250 ns is fulfilled.

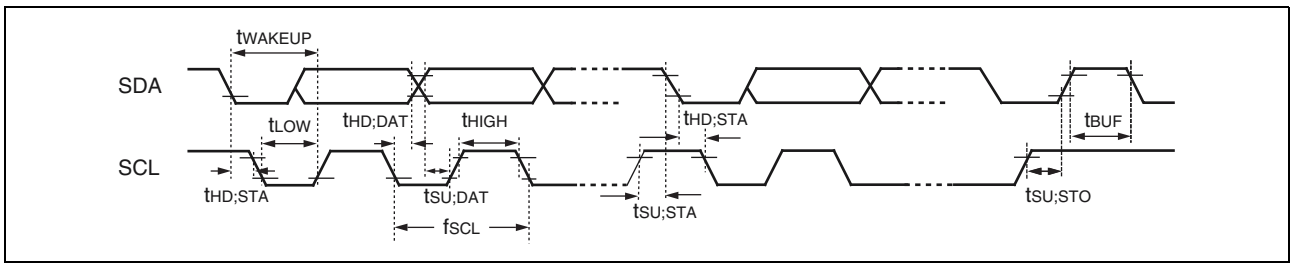

(Continued)

(V_{CC} = 5.0 V±10%, AV_{SS} = V_{SS} = 0.0 V, T_A = –40°C to +85°C)

Parameter	Symbol	Pin name	Condition	Value*2		Unit	Remarks
				Min	Max		
SCL clock "L" width	t_{LOW}	SCL	R = 1.7 kΩ, C = 50 pF*1	$(2 + nm/2)t_{MCLK} - 20$	—	ns	Master mode
SCL clock "H" width	t_{HIGH}	SCL		$(nm/2)t_{MCLK} - 20$	$(nm/2)t_{MCLK} + 20$	ns	Master mode
START condition hold time	$t_{HD;STA}$	SCL, SDA		$(-1 + nm/2)t_{MCLK} - 20$	$(-1 + nm)t_{MCLK} + 20$	ns	Master mode Maximum value is applied when m, n = 1, 8. Otherwise, the minimum value is applied.
STOP condition setup time	$t_{SU;STO}$	SCL, SDA		$(1 + nm/2)t_{MCLK} - 20$	$(1 + nm/2)t_{MCLK} + 20$	ns	Master mode
START condition setup time	$t_{SU;STA}$	SCL, SDA		$(1 + nm/2)t_{MCLK} - 20$	$(1 + nm/2)t_{MCLK} + 20$	ns	Master mode
Bus free time between STOP condition and START condition	t_{BUF}	SCL, SDA		$(2\ nm + 4)t_{MCLK} - 20$	—	ns	
Data hold time	$t_{HD;DAT}$	SCL, SDA		$3\ t_{MCLK} - 20$	—	ns	Master mode
Data setup time	$t_{SU;DAT}$	SCL, SDA		$(-2 + nm/2)t_{MCLK} - 20$	$(-1 + nm/2)t_{MCLK} + 20$	ns	Master mode When assuming that "L" of SCL is not extended, the minimum value is applied to first bit of continuous data. Otherwise, the maximum value is applied.
Setup time between clearing interrupt and SCL rising	$t_{SU;INT}$	SCL		$(nm/2)t_{MCLK} - 20$	$(1 + nm/2)t_{MCLK} + 20$	ns	Minimum value is applied to interrupt at 9th SCL↓. Maximum value is applied to the interrupt at the 8th SCL↓.

(Continued)

(Continued)

(V_{CC} = 5.0 V±10%, AV_{SS} = V_{SS} = 0.0 V, T_A = –40°C to +85°C)

Parameter	Symbol	Pin name	Condition	Value*2		Unit	Remarks
				Min	Max		
SCL clock "L" width	t_{LOW}	SCL	R = 1.7 kΩ, C = 50 pF*1	4 t_{MCLK} – 20	—	ns	At reception
SCL clock "H" width	t_{HIGH}	SCL		4 t_{MCLK} – 20	—	ns	At reception
START condition detection	$t_{HD;STA}$	SCL, SDA		2 t_{MCLK} – 20	—	ns	Not detected when 1 t_{MCLK} is used at reception
STOP condition detection	$t_{SU;STO}$	SCL, SDA		2 t_{MCLK} – 20	—	ns	Not detected when 1 t_{MCLK} is used at reception
RESTART condition detection condition	$t_{SU;STA}$	SCL, SDA		2 t_{MCLK} – 20	—	ns	Not detected when 1 t_{MCLK} is used at reception
Bus free time	t_{BUF}	SCL, SDA		2 t_{MCLK} – 20	—	ns	At reception
Data hold time	$t_{HD;DAT}$	SCL, SDA		2 t_{MCLK} – 20	—	ns	At slave transmission mode
Data setup time	$t_{SU;DAT}$	SCL, SDA		t_{LOW} – 3 t_{MCLK} – 20	—	ns	At slave transmission mode
Data hold time	$t_{HD;DAT}$	SCL, SDA		0	—	ns	At reception
Data setup time	$t_{SU;DAT}$	SCL, SDA		t_{MCLK} – 20	—	ns	At reception
SDA↓ → SCL↑ (at wakeup function)	t_{WAKEUP}	SCL, SDA		Oscillation stabilization wait time +2 t_{MCLK} – 20	—	ns	

*1: R represents the pull-up resistor of the SCL and SDA lines, and C the load capacitor of the SCL and SDA lines.

*2:
- See "(2) Source Clock/Machine Clock" for t_{MCLK}.
- m represents the CS4 bit and CS3 bit (bit4 and bit3) in the I²C clock control register (ICCR0).
- n represents the CS2 bit to CS0 bit (bit2 to bit0) in the I²C clock control register (ICCR0).
- The actual timing of I²C is determined by the values of m and n set by the machine clock (t_{MCLK}) and the CS4 to CS0 bits in the ICCR0 register.
- Standard-mode:
  m and n can be set to values in the following range: 0.9 MHz < t_{MCLK} (machine clock) < 10 MHz.
  The usable frequencies of the machine clock are determined by the settings of m and n as shown below.
  (m, n) = (1, 8) : 0.9 MHz < t_{MCLK} ≤ 1 MHz
  (m, n) = (1, 22), (5, 4), (6, 4), (7, 4), (8, 4) : 0.9 MHz < t_{MCLK} ≤ 2 MHz
  (m, n) = (1, 38), (5, 8), (6, 8), (7, 8), (8, 8) : 0.9 MHz < t_{MCLK} ≤ 4 MHz
  (m, n) = (1, 98) : 0.9 MHz < t_{MCLK} ≤ 10 MHz
- Fast-mode:
  m and n can be set to values in the following range: 3.3 MHz < t_{MCLK} (machine clock) < 10 MHz.
  The usable frequencies of the machine clock are determined by the settings of m and n as shown below.
  (m, n) = (1, 8) : 3.3 MHz < t_{MCLK} ≤ 4 MHz
  (m, n) = (1, 22), (5, 4) : 3.3 MHz < t_{MCLK} ≤ 8 MHz
  (m, n) = (6, 4) : 3.3 MHz < t_{MCLK} ≤ 10 MHz

(9) UART/SIO, Serial I/O Timing

(V_{CC} = 5.0 V±10%, AV_{SS} = V_{SS} = 0.0 V, T_A = –40°C to +85°C)

Parameter	Symbol	Pin name	Condition	Value		Unit
				Min	Max	
Serial clock cycle time	t_{SCYC}	UCK0	Internal clock operation	4 t_{MCLK}*	—	ns
UCK ↓ → UO time	t_{SLOV}	UCK0, UO0		–190	+190	ns
Valid UI → UCK ↑	t_{IVSH}	UCK0, UI0		2 t_{MCLK}*	—	ns
UCK ↑ → valid UI hold time	t_{SHIX}	UCK, UI0		2 t_{MCLK}*	—	ns
Serial clock “H” pulse width	t_{SHSL}	UCK0	External clock operation	4 t_{MCLK}*	—	ns
Serial clock “L” pulse width	t_{SLSH}	UCK0		4 t_{MCLK}*	—	ns
UCK ↓ → UO time	t_{SLOV}	UCK0, UO0		—	190	ns
Valid UI → UCK ↑	t_{IVSH}	UCK0, UI0		2 t_{MCLK}*	—	ns
UCK ↑ → valid UI hold time	t_{SHIX}	UCK0, UI0		2 t_{MCLK}*	—	ns

*: See “(2) Source Clock/Machine Clock” for t_{MCLK}.

- Internal shift clock mode

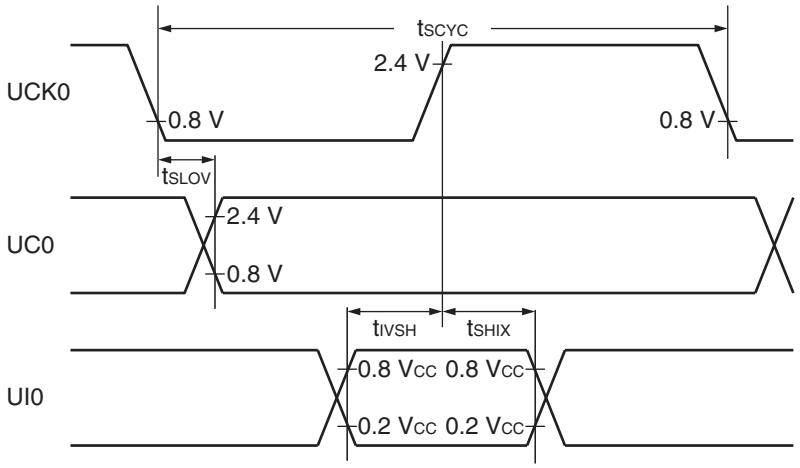

- External shift clock mode

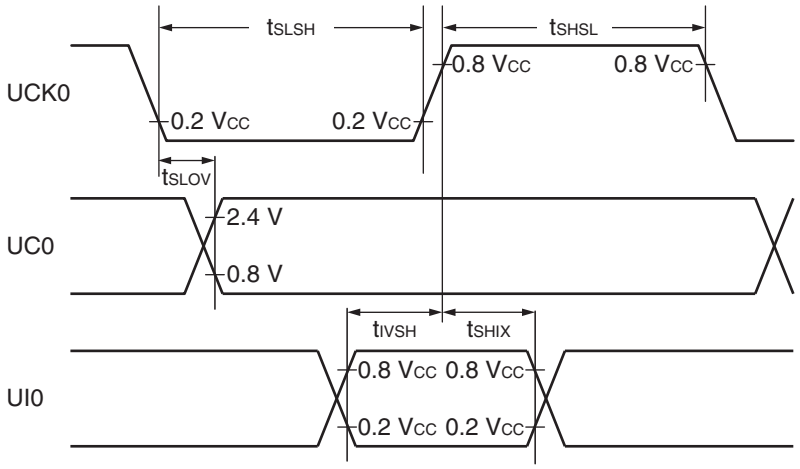

(10) MPG Input Timing

(V_{CC} = 5.0 V±10%, AV_{SS} = V_{SS} = 0.0 V, T_A = –40°C to +85°C)

Parameter	Symbol	Pin name	Condition	Value		Unit	Remarks
				Min	Max		
Input pulse width	t_{TIWH} t_{TIWL}	SNI0 to SNI2, DTTI	—	4 t_{MCLK}	—	ns	

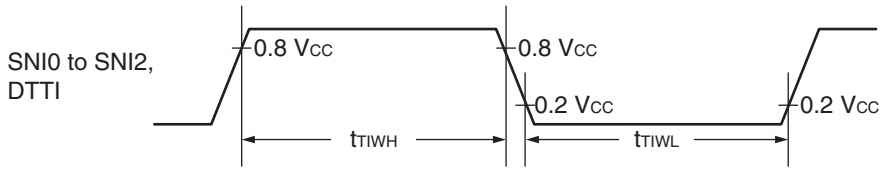

5. A/D Converter

(1) A/D Converter Electrical Characteristics

(V_{CC} = 4.0 V to 5.5 V, V_{SS} = 0.0 V, T_A = –40°C to +85°C)

Parameter	Symbol	Value			Unit	Remarks
		Min	Typ	Max		
Resolution	—	—	—	10	bit	
Total error		–3	—	+3	LSB	
Linearity error		–2.5	—	+2.5	LSB	
Differential linear error		–1.9	—	+1.9	LSB	
Zero transition voltage	V_{OT}	V_{SS} – 1.5 LSB	V_{SS} + 0.5 LSB	V_{SS} + 2.5 LSB	V	
Full-scale transition voltage	V_{FST}	V_{CC} – 4.5 LSB	V_{CC} – 2 LSB	V_{CC} + 0.5 LSB	V	
Compare time	—	0.9	—	16500	μs	4.5 V ≤ V_{CC} ≤ 5.5 V
		1.8	—	16500	μs	4.0 V ≤ V_{CC} < 4.5 V
Sampling time	—	0.6	—	∞	μs	4.5 V ≤ V_{CC} ≤ 5.5 V, with external impedance < 5.4 kΩ
		1.2	—	∞	μs	4.0 V ≤ V_{CC} < 4.5 V, with external impedance < 2.4 kΩ
Analog input current	I_{AIN}	–0.3	—	+0.3	μA	
Analog input voltage	V_{AIN}	V_{SS}	—	V_{CC}	V	

(2) Notes on Using the A/D Converter

• External impedance of analog input and its sampling time

- The A/D converter has a sample and hold circuit. If the external impedance is too high to keep sufficient sampling time, the analog voltage charged to the capacitor of the internal sample and hold circuit is insufficient, adversely affecting A/D conversion precision. Therefore, to satisfy the A/D conversion precision standard, considering the relationship between the external impedance and minimum sampling time, either adjust the register value and operating frequency or decrease the external impedance so that the sampling time is longer than the minimum value. In addition, if sufficient sampling time cannot be secured, connect a capacitor of about 0.1 μF to the analog input pin.

- Analog input equivalent circuit

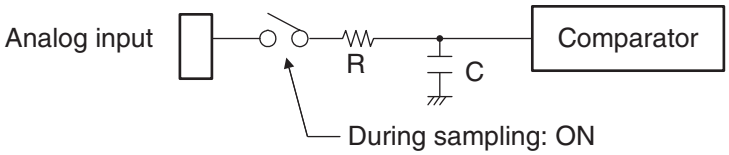

V_{CC}	R	C
4.5 V ≤ V_{CC} ≤ 5.5 V	1.95 kΩ (Max)	17 pF (Max)
4.0 V ≤ V_{CC} < 4.5 V	8.98 kΩ (Max)	17 pF (Max)

Note: The values are reference values.

- Relationship between external impedance and minimum sampling time

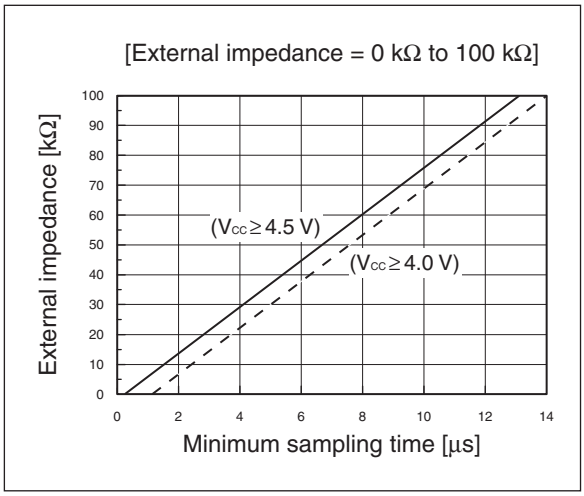

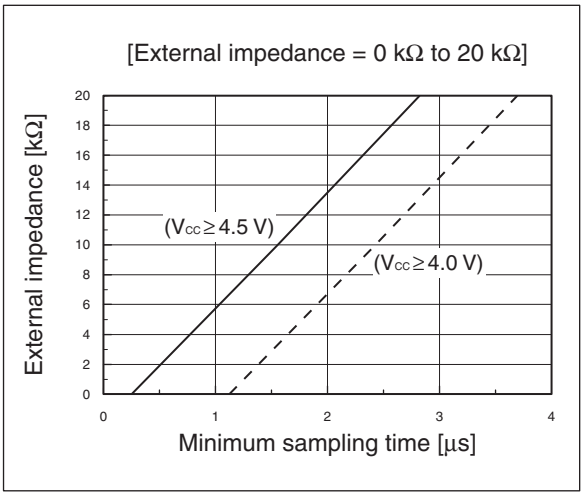

• A/D conversion error

As |V_{CC}–V_{SS}| decreases, the A/D conversion error increases proportionately.

(3) Definitions of A/D Converter Terms

- Resolution
  It indicates the level of analog variation that can be distinguished by the A/D converter.
  When the number of bits is 10, analog voltage can be divided into 2^{10} = 1024.
- Linearity error (unit: LSB)
  It indicates how much an actual conversion value deviates from the straight line connecting the zero transition point (“00 0000 0000” ← → “00 0000 0001”) of a device to the full-scale transition point (“11 1111 1111” ← → “11 1111 1110”) of the same device.
- Differential linear error (unit: LSB)
  It indicates how much the input voltage required to change the output code by 1 LSB deviates from an ideal value.
- Total error (unit: LSB)
  It indicates the difference between an actual value and a theoretical value. The error can be caused by a zero transition error, a full-scale transition errors, a linearity error, a quantum error, or noise.

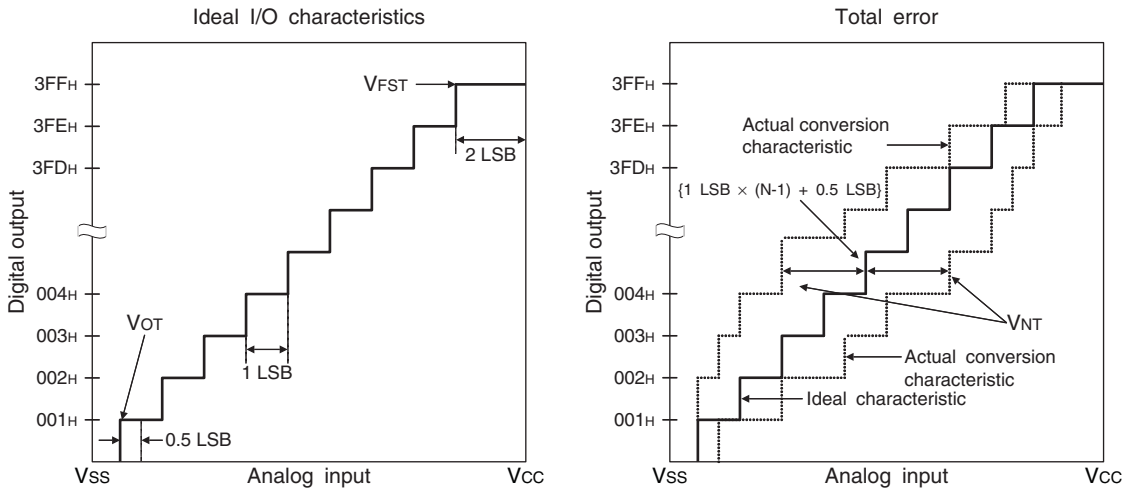

$$1\ \text{LSB} = \frac{V_{CC} - V_{SS}}{1024}\ (\text{V})$$

$$\text{Total error of digital output N} = \frac{V_{NT} - \{1\ \text{LSB} \times (N - 1) + 0.5\ \text{LSB}\}}{1\ \text{LSB}}\ [\text{LSB}]$$

N : A/D converter digital output value

V_{NT} : Voltage at which the digital output transits from $(N - 1)_H$ to N_H

(Continued)

(Continued)

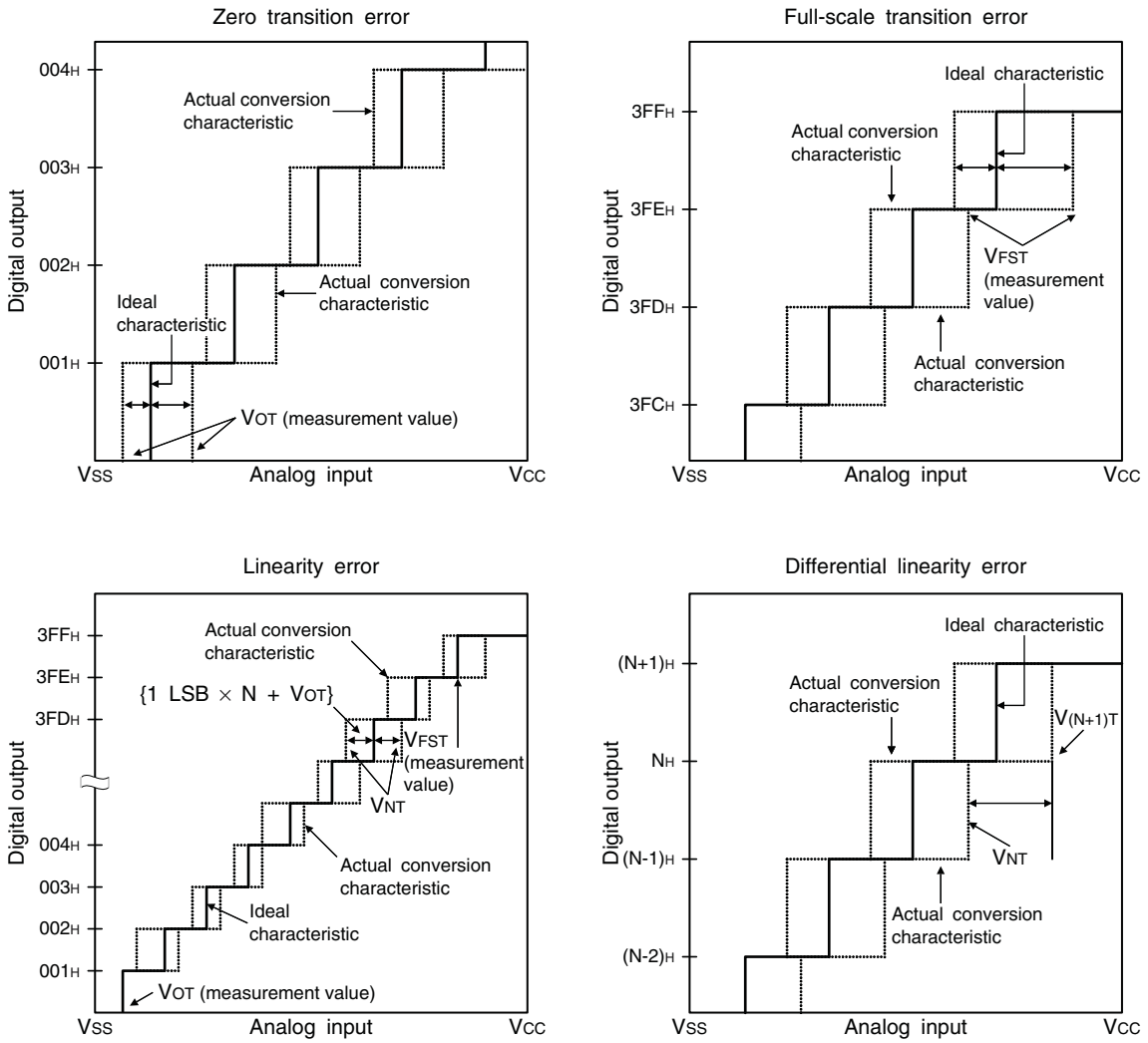

$$\text{Linearity error of digital output N} = \frac{V_{NT} - \{1\ \text{LSB} \times N + V_{OT}\}}{1\ \text{LSB}}$$

$$\text{Differential linear error of digital output N} = \frac{V_{(N+1)T} - V_{NT}}{1\ \text{LSB}} - 1$$

N : A/D converter digital output value

V_{NT} : Voltage at which the digital output transits from $(N - 1)_H$ to N_H

V_{OT} (ideal value) = V_{SS} + 0.5 LSB [V]

V_{FST} (ideal value) = V_{CC} - 2 LSB [V]

6. Flash Memory Write/Erase Characteristics

Parameter	Value			Unit	Remarks
	Min	Typ	Max		
Sector erase time (2 Kbyte sector)	—	0.2*1	0.5*2	s	The time of writing 00_H prior to erasure is excluded.
Sector erase time (16 Kbyte sector)	—	0.5*1	7.5*2	s	The time of writing 00_H prior to erasure is excluded.
Byte writing time	—	21	6100*2	μs	System-level overhead is excluded.
Erase/write cycle	100000	—	—	cycle	
Power supply voltage at erase/ write	3.0	—	5.5	V	
Flash memory data retention time	20*3	—	—	year	Average T_A = +85°C

*1: T_A = +25°C, V_{CC} = 5.0 V, 100000 cycles

*2: T_A = +85°C, V_{CC} = 3.0 V, 100000 cycles

*3: This value is converted from the result of a technology reliability assessment. (The value is converted from the result of a high temperature accelerated test using the Arrhenius equation with the average temperature being +85°C).

■ SAMPLE CHARACTERISTICS

- Power supply current temperature characteristics

I_{CC} – V_{CC}

T_A = +25°C, F_{MP} = 2, 4, 8, 10, 16 MHz (divided by 2)

Main clock mode with the external clock operating

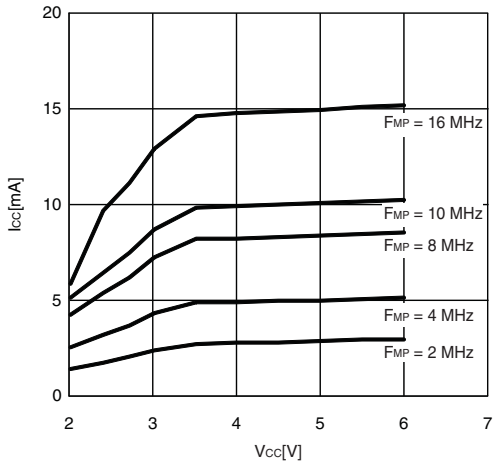

I_{CC} – T_A

V_{CC} = 5.5 V, F_{MP} = 10, 16 MHz (divided by 2)

Main clock mode with the external clock operating

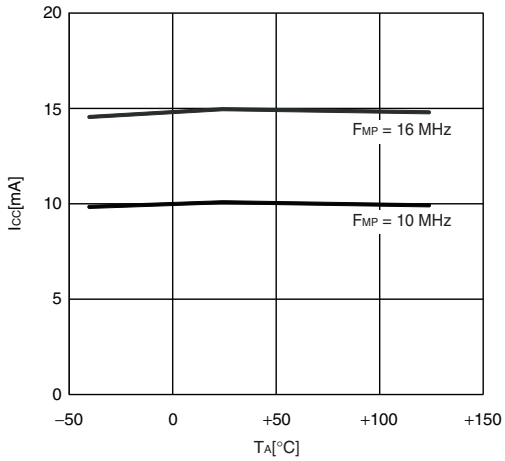

I_{CCS} – V_{CC}

T_A = +25°C, F_{MP} = 2, 4, 8, 10, 16 MHz (divided by 2)

Main sleep mode with the external clock operating

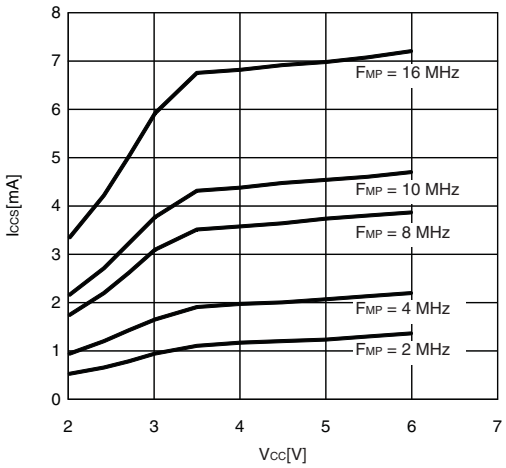

I_{CCS} – T_A

V_{CC} = 5.5 V, F_{MP} = 10, 16 MHz (divided by 2)

Main sleep mode with the external clock operating

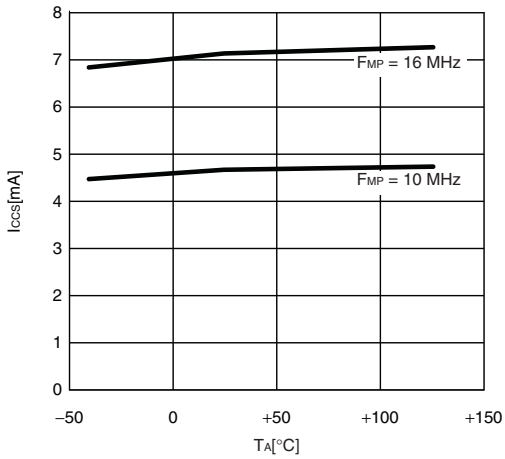

I_{CCL} – V_{CC}

T_A = +25°C, F_{MPL} = 16 kHz (divided by 2)

Subclock mode with the external clock operating

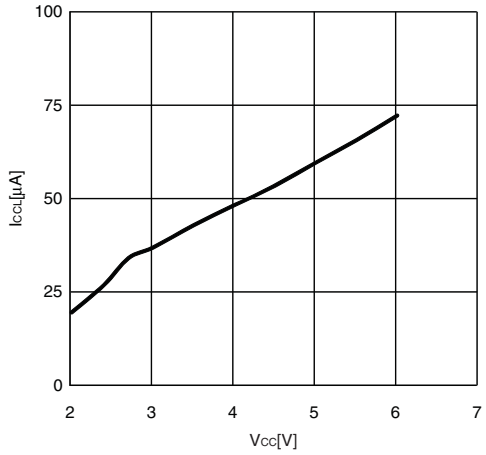

I_{CCL} – T_A

V_{CC} = 5.5 V, F_{MPL} = 16 kHz (divided by 2)

Subclock mode with the external clock operating

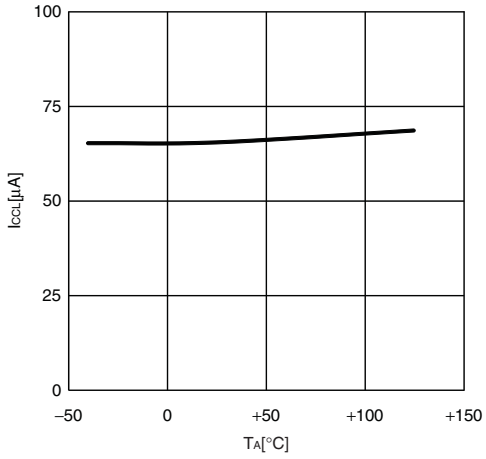

(Continued)

I_{CCLS} – V_{CC}
T_A = +25°C, F_{MPL} = 16 kHz (divided by 2)
Subsleep mode with the external clock operating

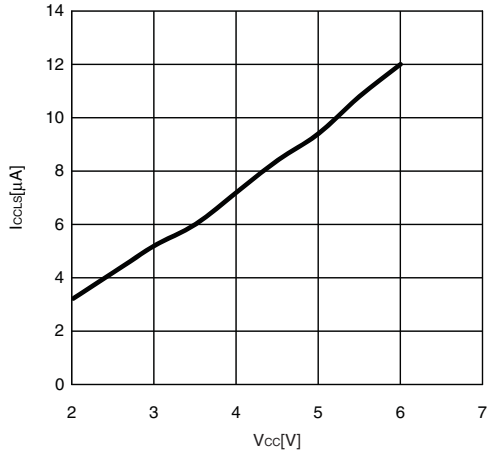

I_{CCLS} – T_A
V_{CC} = 5.5 V, F_{MPL} = 16 kHz (divided by 2)
Subsleep mode with the external clock operating

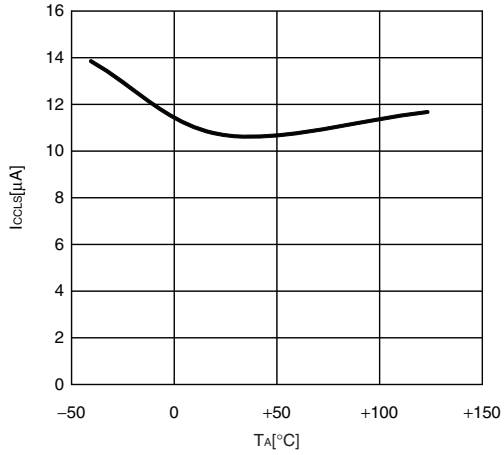

I_{CCT} – V_{CC}
T_A = +25°C, F_{MPL} = 16 kHz (divided by 2)
Watch mode with the external clock operating

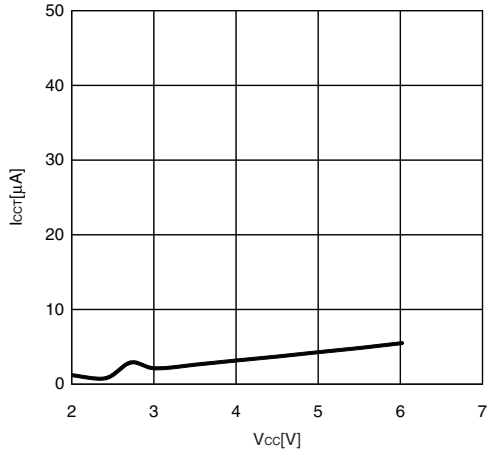

I_{CCT} – T_A
V_{CC} = 5.5 V, F_{MPL} = 16 kHz (divided by 2)
Watch mode with the external clock operating

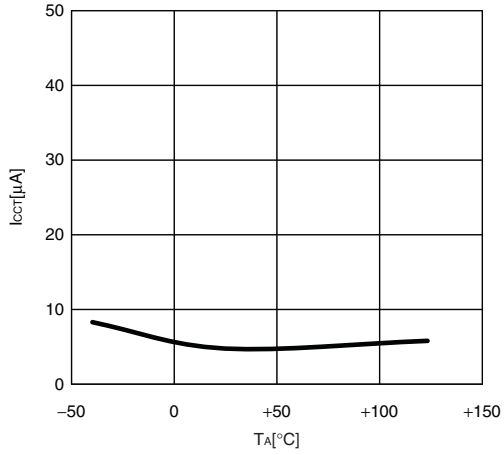

I_{CTS} – V_{CC}
T_A = +25°C, F_{MP} = 2, 4, 8, 10, 16 MHz (divided by 2)
Time-base timer mode with the external clock operating

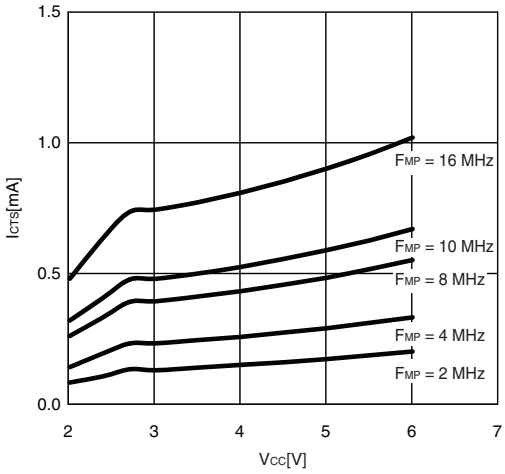

I_{CTS} – T_A
V_{CC} = 5.5 V, F_{MPL} = 10, 16 kHz (divided by 2)
Time-base timer mode with the external clock operating

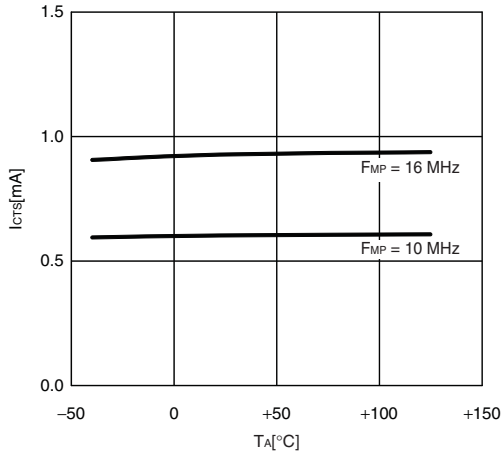

(Continued)

(Continued)

I_{CCH} – V_{CC}
T_A = +25°C, F_{MPL} = (stop)
Substop mode with the external clock stopping

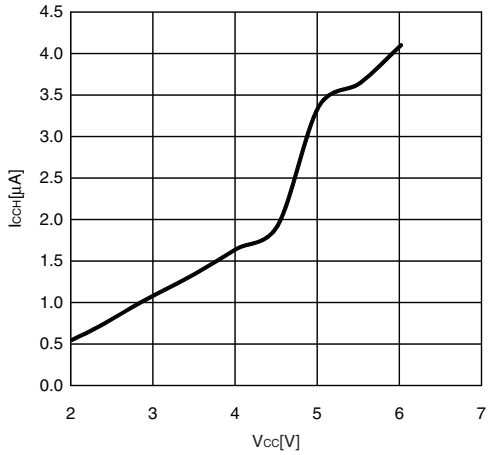

I_{CCH} – T_A
V_{CC} = 5.5 V, F_{MPL} = (stop)
Substop mode with the external clock stopping

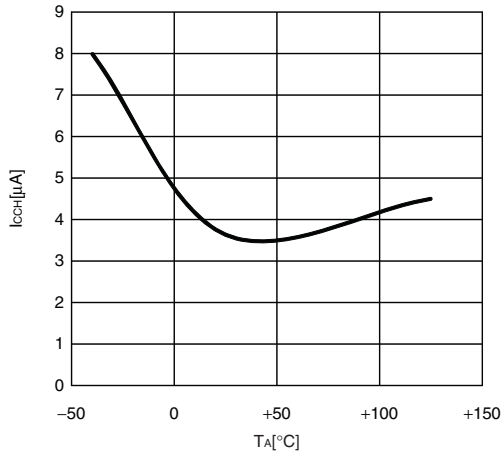

I_{CCMCR} – V_{CC}
T_A = +25°C, F_{MP} = 1, 8, 10, 12.5 MHz (no division)
Main clock mode with the main CR clock operating

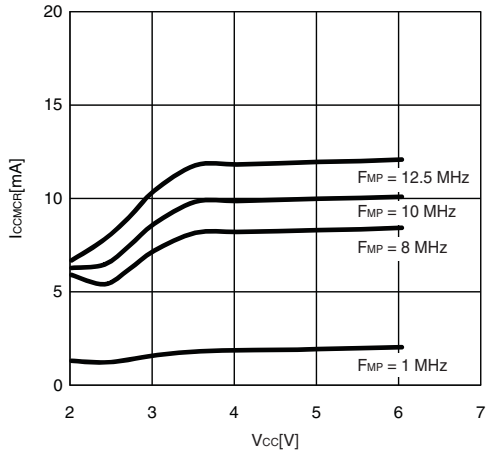

I_{CCMCR} – T_A
V_{CC} = 5.5 V, F_{MP} = 1, 8, 10, 12.5 MHz (no division)
Main clock mode with the main CR clock operating

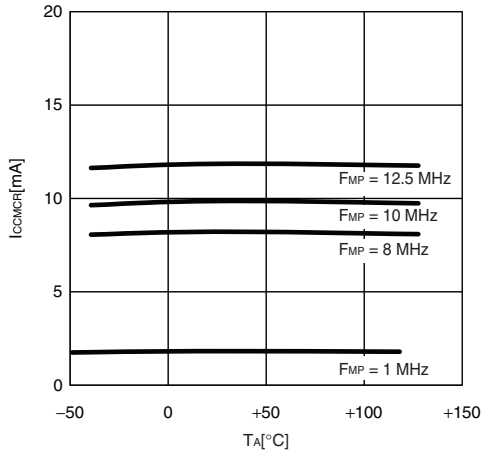

I_{CCSCR} – V_{CC}
T_A = +25°C, F_{MPL} = 50 kHz (divided by 2)
Subclock mode with the sub-CR clock operating

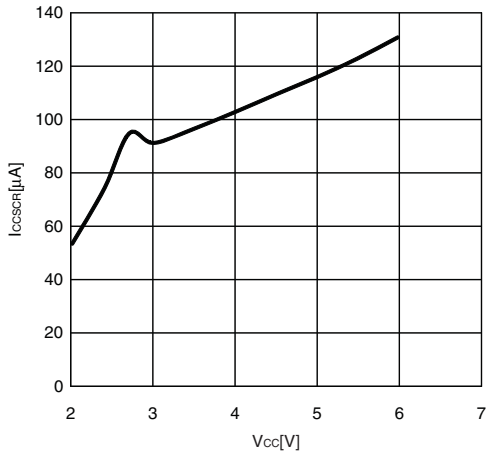

I_{CCSCR} – T_A
V_{CC} = 5.5 V, F_{MPL} = 50 kHz (divided by 2)
Subclock mode with the sub-CR clock operating

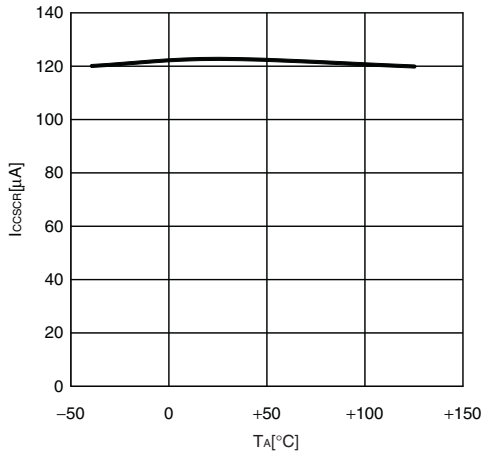

- Input voltage characteristics

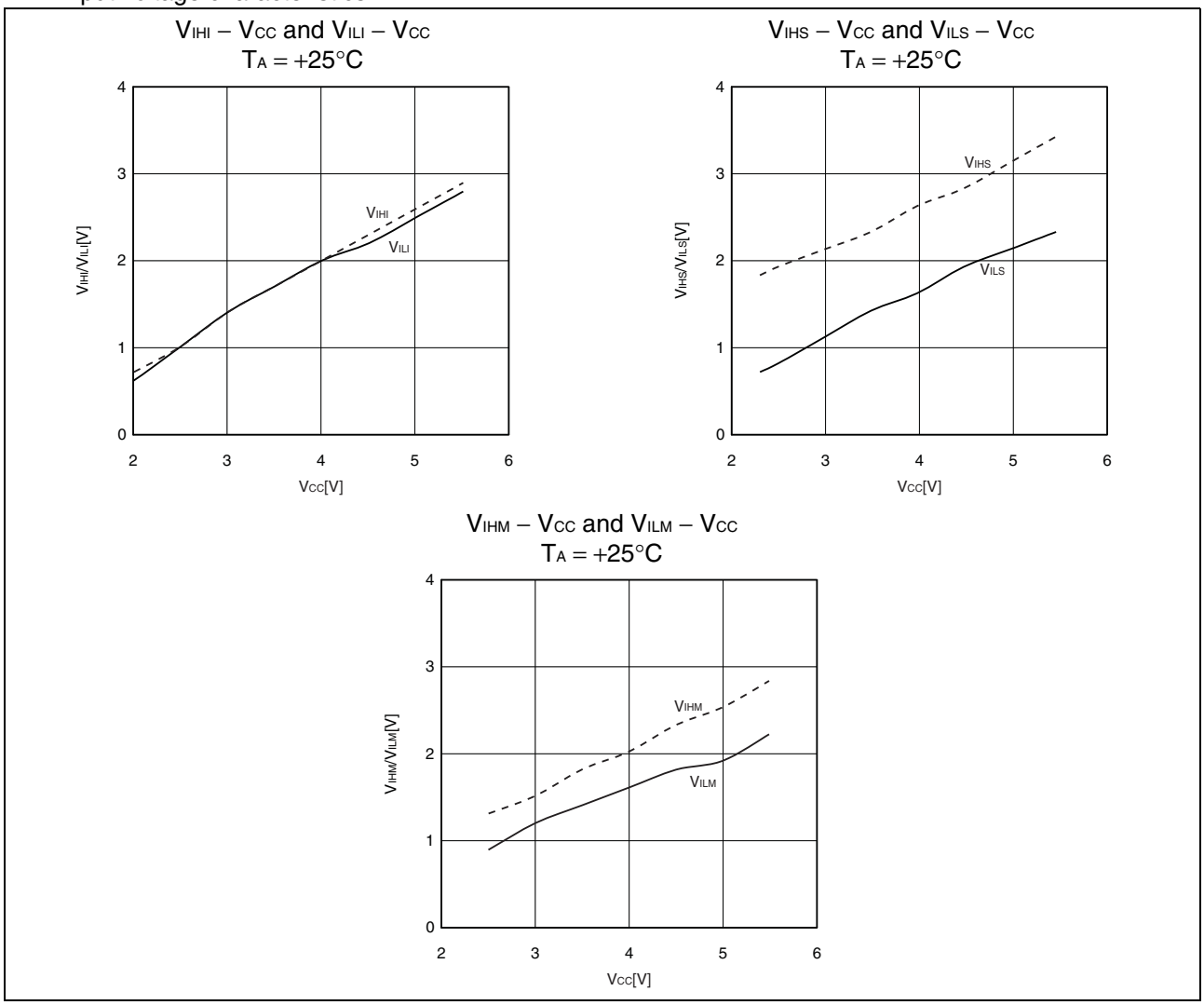

- Output voltage characteristics

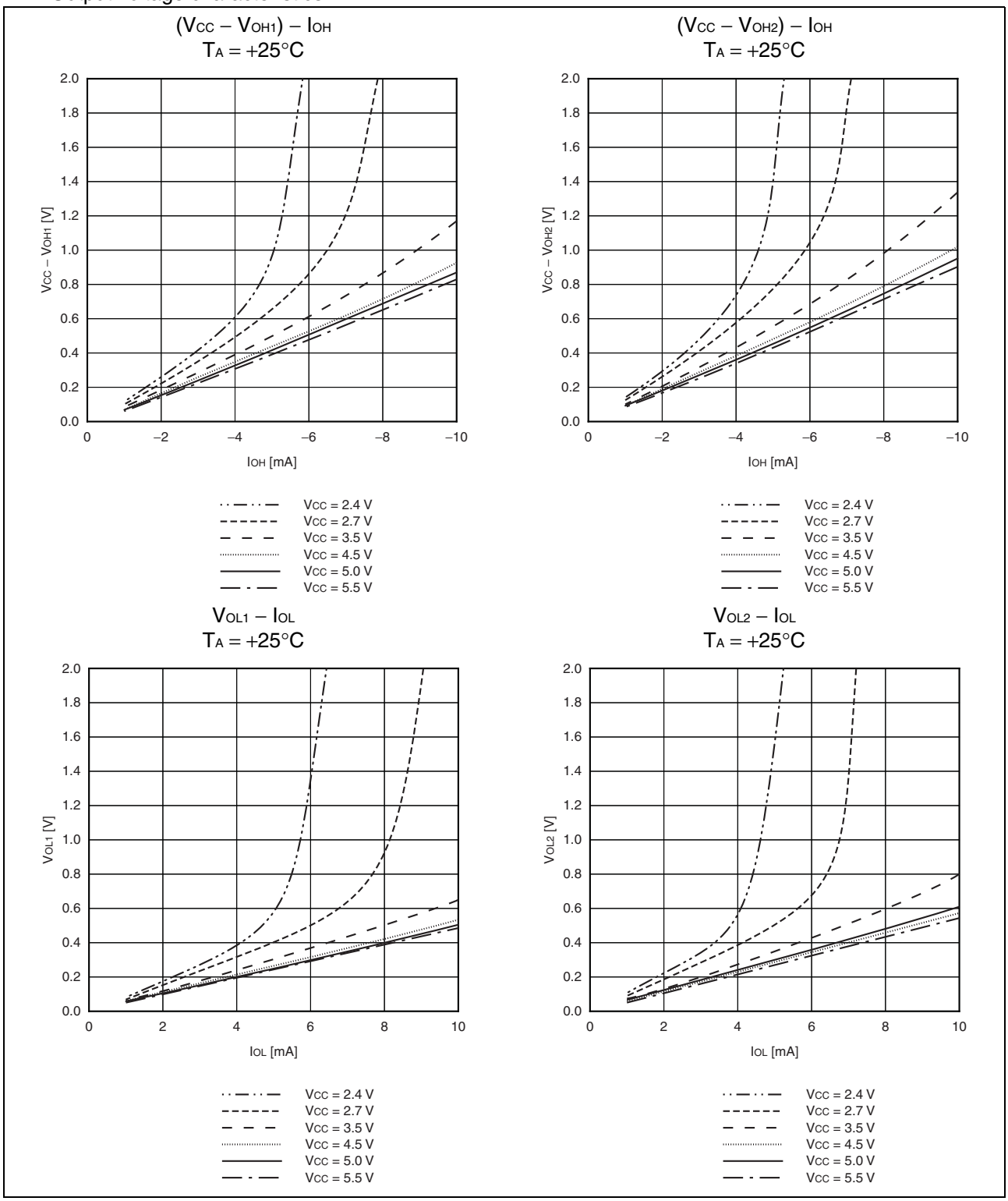

- Pull-up characteristics

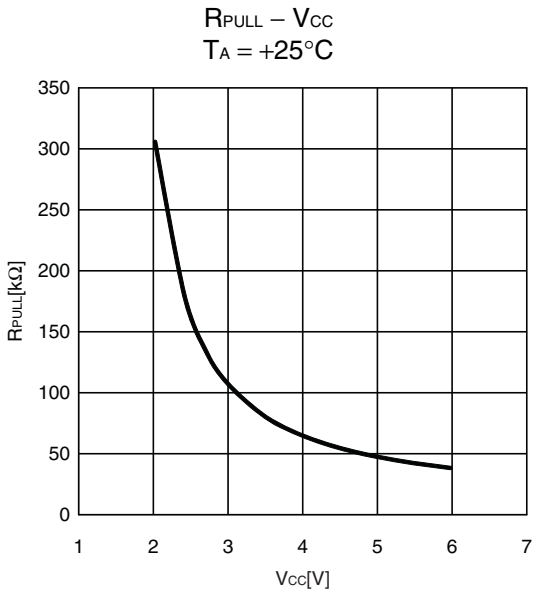

■ MASK OPTIONS

No.	Part Number	MB95F394H MB95F396H MB95F398H	MB95F394K MB95F396K MB95F398K
	Selectable/Fixed	Fixed	
1	Low-voltage detection reset	Without low-voltage detection reset	With low-voltage detection reset
2	Reset	With dedicated reset input	Without dedicated reset input

■ ORDERING INFORMATION

Part Number	Package
MB95F394HPMC-G-SNE2 MB95F394KPMC-G-SNE2 MB95F396HPMC-G-SNE2 MB95F396KPMC-G-SNE2 MB95F398HPMC-G-SNE2 MB95F398KPMC-G-SNE2	48-pin plastic LQFP (FPT-48P-M49)
MB95F394HPMC1-G-SNE2 MB95F394KPMC1-G-SNE2 MB95F396HPMC1-G-SNE2 MB95F396KPMC1-G-SNE2 MB95F398HPMC1-G-SNE2 MB95F398KPMC1-G-SNE2	52-pin plastic LQFP (FPT-52P-M02)
MB95F394HWQN-G-SNE1 MB95F394HWQN-G-SNERE1 MB95F394KWQN-G-SNE1 MB95F394KWQN-G-SNERE1 MB95F396HWQN-G-SNE1 MB95F396HWQN-G-SNERE1 MB95F396KWQN-G-SNE1 MB95F396KWQN-G-SNERE1 MB95F398HWQN-G-SNE1 MB95F398HWQN-G-SNERE1 MB95F398KWQN-G-SNE1 MB95F398KWQN-G-SNERE1	48-pin plastic QFN (LCC-48P-M11)

■ PACKAGE DIMENSION

48-pin plastic LQFP		
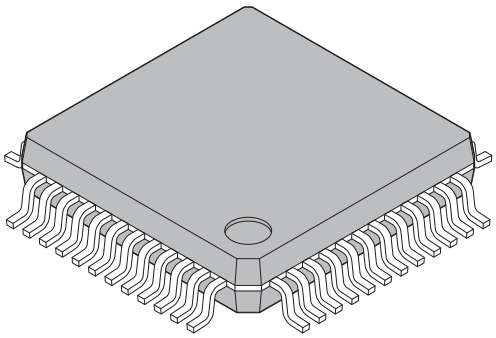 (FPT-48P-M49)	Lead pitch	0.50 mm
	Package width × package length	7.00 mm × 7.00 mm
	Lead shape	Gullwing
	Lead bend direction	Normal bend
	Sealing method	Plastic mold
	Mounting height	1.70 mm MAX
	Weight	0.17 g

48-pin plastic LQFP
(FPT-48P-M49)

Note 1) * : These dimensions do not include resin protrusion.
Note 2) Pins width and pins thickness include plating thickness.
Note 3) Pins width do not include tie bar cutting remainder.

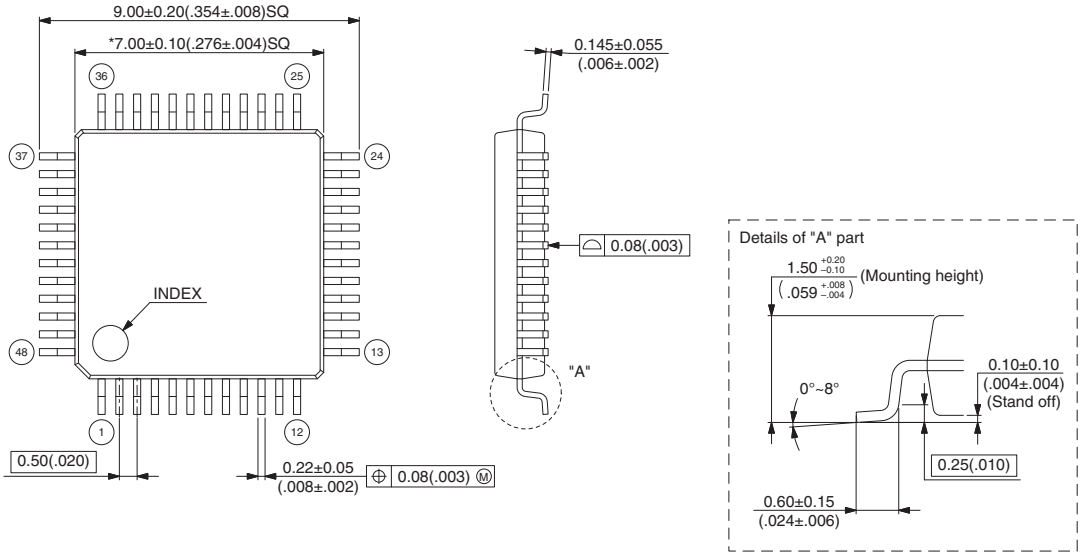

Dimensions in mm (inches).
Note: The values in parentheses are reference values.

Please check the latest package dimension at the following URL.
http://edevice.fujitsu.com/package/en-search/

(Continued)

52-pin plastic LQFP		
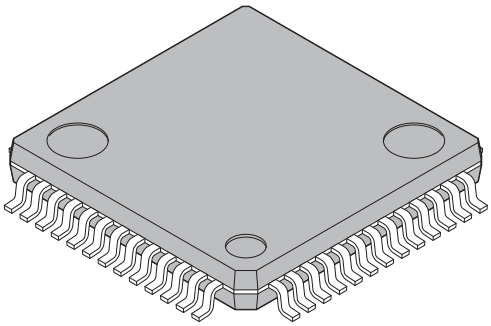	Lead pitch	0.65 mm
	Package width × package length	10.00 × 10.00 mm
	Lead shape	Gullwing
	Sealing method	Plastic mold
	Mounting height	1.70 mm MAX
	Weight	0.32 g
(FPT-52P-M02)	Code (Reference)	P-LFQFP52-10×10-0.65

52-pin plastic LQFP
(FPT-52P-M02)

Note 1) * : These dimensions do not include resin protrusion.
Note 2) Pins width and pins thickness include plating thickness.
Note 3) Pins width do not include tie bar cutting remainder.

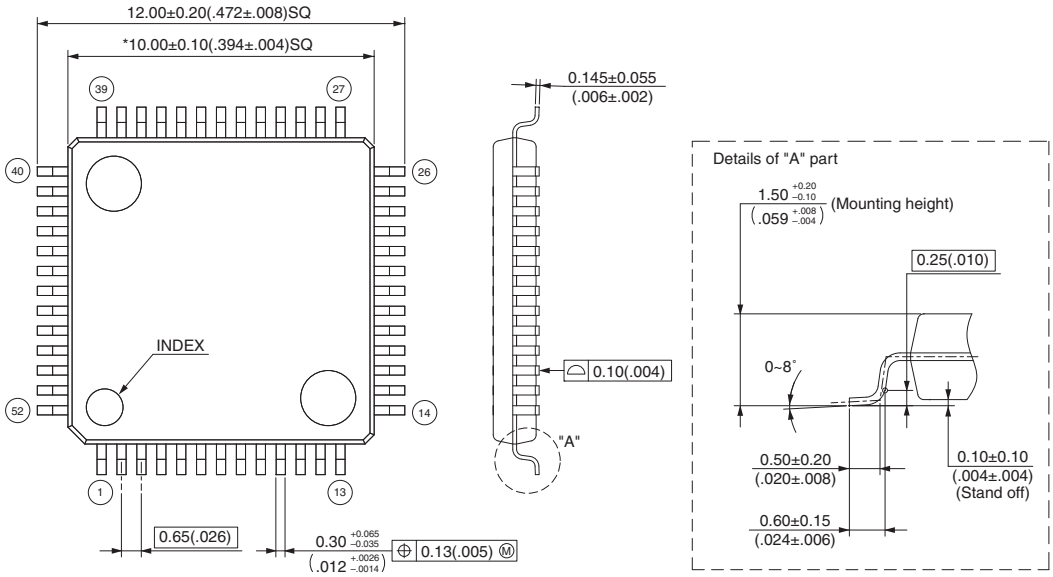

Dimensions in mm (inches).
Note: The values in parentheses are reference values

Please check the latest package dimension at the following URL.
http://edevice.fujitsu.com/package/en-search/

(Continued)

(Continued)

48-pin plastic QFN		
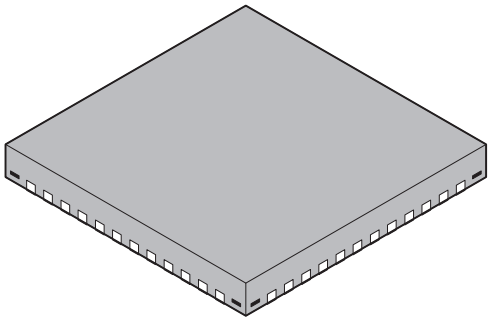	Lead pitch	0.50 mm
	Package width × package length	7.00 mm × 7.00 mm
	Sealing method	Plastic mold
	Mounting height	0.80 mm MAX
	Weight	0.12 g
(LCC-48P-M11)		

48-pin plastic QFN
(LCC-48P-M11)

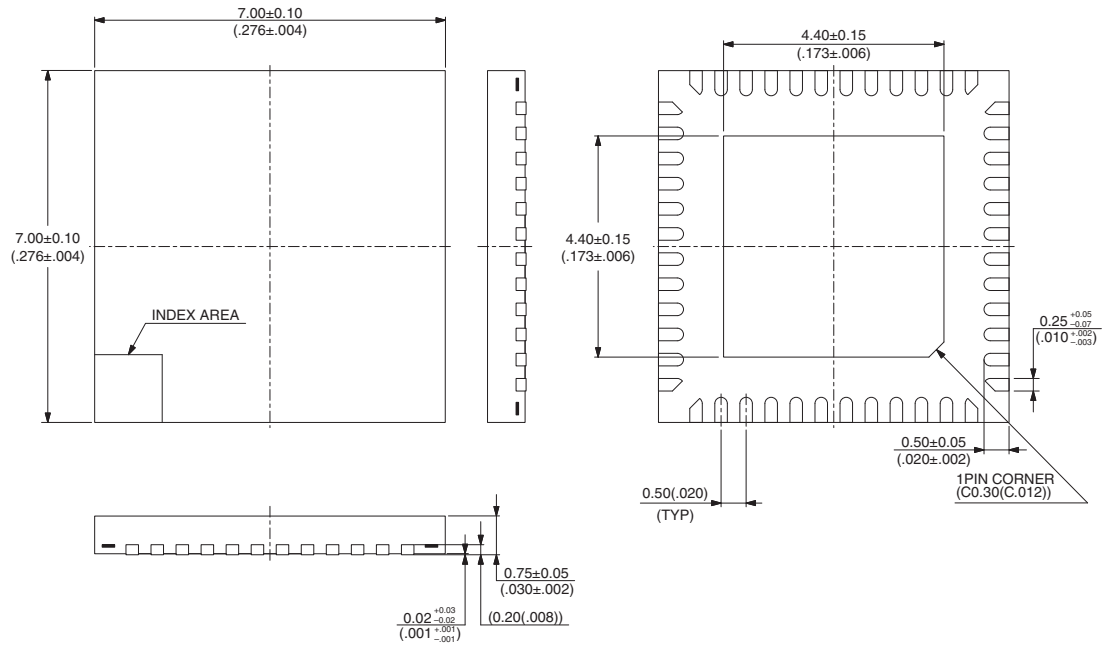

Dimensions in mm (inches).
Note: The values in parentheses are reference values.

Please check the latest package dimension at the following URL.
http://edevice.fujitsu.com/package/en-search/

■ MAJOR CHANGES IN THIS EDITION

Page	Section	Details
1	■ FEATURES	Changed the main CR clock oscillation accuracy. ±2% → ±2% or ±2.5% Added a remark about the main CR clock accuracy.
4	■ PRODUCT LINE-UP	Added FPT-52P-M02.
5	■ PACKAGES AND CORRESPONDING PRODUCTS	Added FPT-52P-M02.
6	■ DIFFERENCES AMONG PRODUCTS AND NOTES ON PRODUCT SELECTION	Added a reference for the connection method in "• On-chip debug function".
8	■ PIN ASSIGNMENT	Added the pin assignment diagram of FPT-52P-M02.
10 to 13	■ PIN FUNCTIONS	Added the pin numbers of FPT-52P-M02.
34	■ ELECTRICAL CHARACTERISTICS 4. AC Characteristics (1) Clock Timing	Changed the values of clock frequency (F_{CRH}). Added conditions related to the LQFP package and the QFN package for the values of clock frequency (F_{CRH}). Added footnotes *2 and *3.
58 to 63	■ SAMPLE CHARACTERISTICS	Added "■ SAMPLE CHARACTERISTICS".
65	■ ORDERING INFORMATION	Added the part numbers of FPT-52P-M02.
67	■ PACKAGE DIMENSION	Added the package diagram of FPT-52P-M02.

The vertical lines marked on the left side of the page indicate the changes.

MEMO

MEMO

FUJITSU SEMICONDUCTOR LIMITED

Nomura Fudosan Shin-yokohama Bldg. 10-23, Shin-yokohama 2-Chome,
Kohoku-ku Yokohama Kanagawa 222-0033, Japan
Tel: +81-45-415-5858
http://jp.fujitsu.com/fsl/en/

For further information please contact:

North and South America
FUJITSU SEMICONDUCTOR AMERICA, INC.
1250 E. Arques Avenue, M/S 333
Sunnyvale, CA 94085-5401, U.S.A.
Tel: +1-408-737-5600 Fax: +1-408-737-5999
http://us.fujitsu.com/micro/

Europe
FUJITSU SEMICONDUCTOR EUROPE GmbH
Pittlerstrasse 47, 63225 Langen, Germany
Tel: +49-6103-690-0 Fax: +49-6103-690-122
http://emea.fujitsu.com/semiconductor/

Korea
FUJITSU SEMICONDUCTOR KOREA LTD.
206 Kosmo Tower Building, 1002 Daechi-Dong,
Gangnam-Gu, Seoul 135-280, Republic of Korea
Tel: +82-2-3484-7100 Fax: +82-2-3484-7111
http://kr.fujitsu.com/fmk/

Asia Pacific
FUJITSU SEMICONDUCTOR ASIA PTE. LTD.
151 Lorong Chuan,
#05-08 New Tech Park 556741 Singapore
Tel : +65-6281-0770 Fax : +65-6281-0220
http://www.fujitsu.com/sg/services/micro/semiconductor/

FUJITSU SEMICONDUCTOR SHANGHAI CO., LTD.
Rm. 3102, Bund Center, No.222 Yan An Road (E),
Shanghai 200002, China
Tel : +86-21-6146-3688 Fax : +86-21-6335-1605
http://cn.fujitsu.com/fss/

FUJITSU SEMICONDUCTOR PACIFIC ASIA LTD.
10/F., World Commerce Centre, 11 Canton Road,
Tsimshatsui, Kowloon, Hong Kong
Tel : +852-2377-0226 Fax : +852-2376-3269
http://cn.fujitsu.com/fsp/

Edited: Sales Promotion Department