Bothhand USA. **e-mail: sales@bothhandusa.com http://www.bothhandusa.com**

40 PIN SMD ETHERNET 10/100 BASE-TX QUAD PORT TRANSFORMER

P/N: 40ST1041 DATA SHEET

Feature

- 40-PIN SMD Package compatible with broadcom ,NS TMI Davicom chips.
- Designed for multiport repeater and switched Ethernet applications utilizing single RJ-45 connectors.
- Operating temperature range : 0℃ to +70℃.
- Storage temperature range: -25℃ to +125℃.

Electrical Specifications @ 25°C

Part Number	Turns Ratio (±5%)		OCL(μH Min) @100KHz/0.1Vrms 8mA DC/Bias	L.L (μH Max)	Cw/w (pF Max)	Isolation voltage (Vrms)	Insulation resistance (MΩ)
	TX	RX					
40ST1041	1CT:1CT	1:1	350	0.42	30	1500	10,000

Continue

Part Number	Insertion Loss (dB Max)	Return Loss (dB Min)			Cross talk (dB Min)	DCMR (dB Min)	
	0.3–100MHz	0.3-30MHz	30-60MHz	60-80MHz	0.3-100MHz	1-60MHz	60-200MHZ
40ST1041	-1.15	-16	-12	-10	-38	-37	-25

Schematic

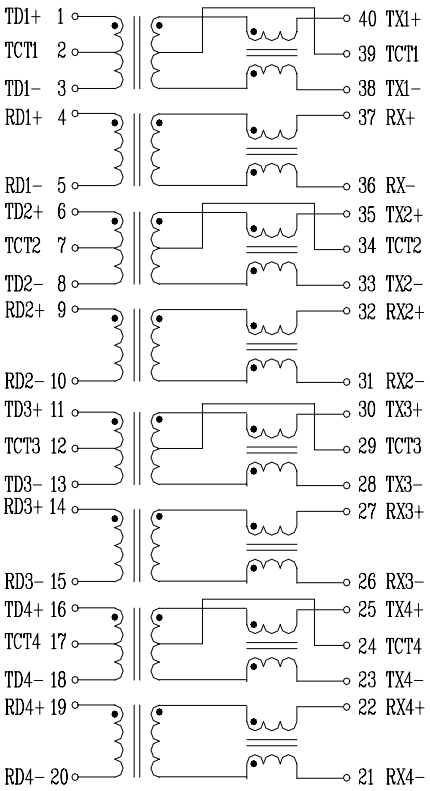

Mechanical

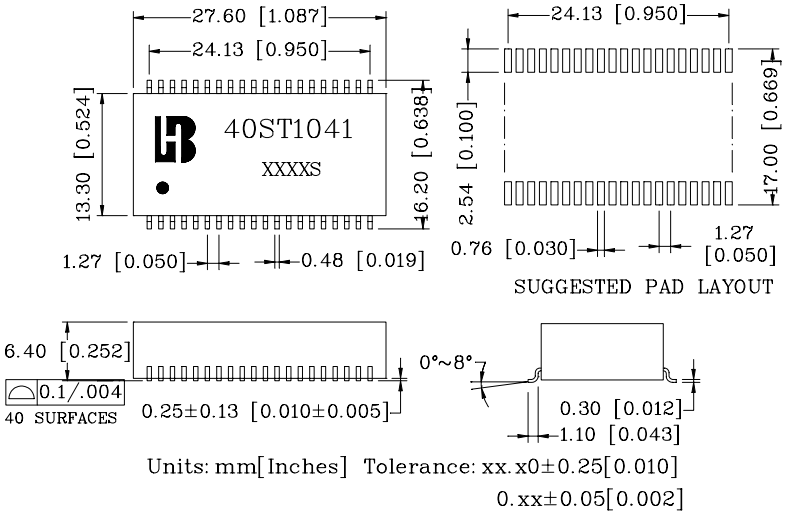

462 Boston St - Topsfield, MA 01983 - Phone: 978-887-8050 - Fax: 978-887-5434