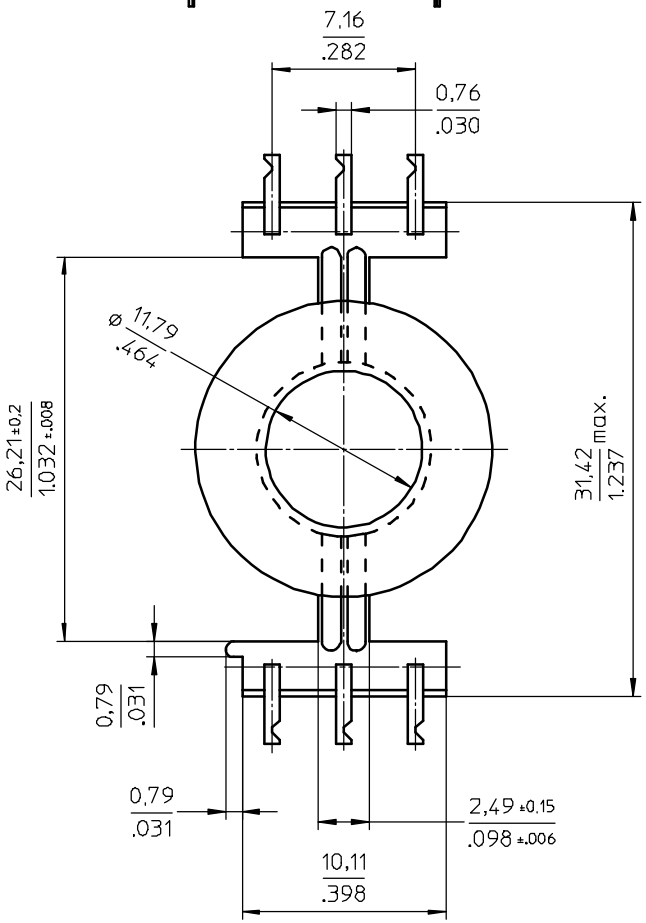


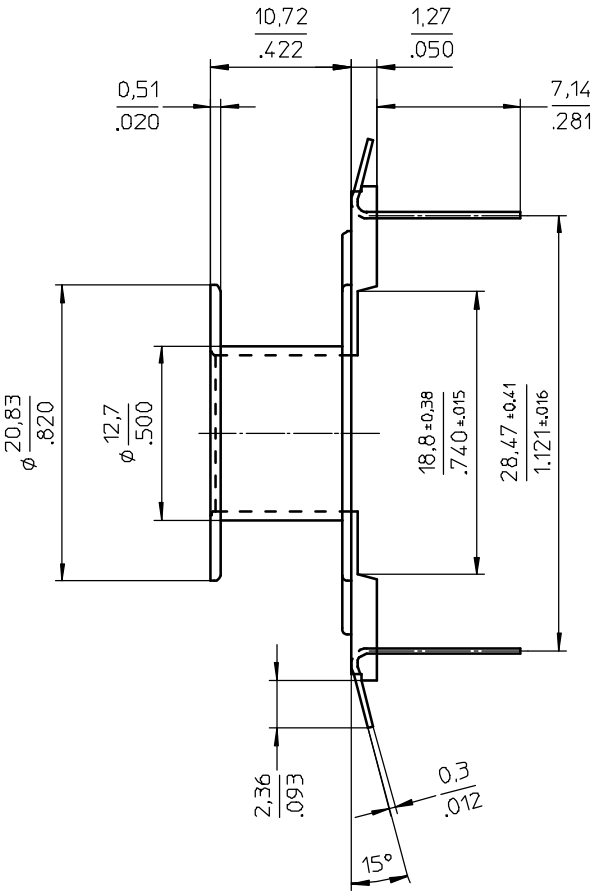


Grid pattern

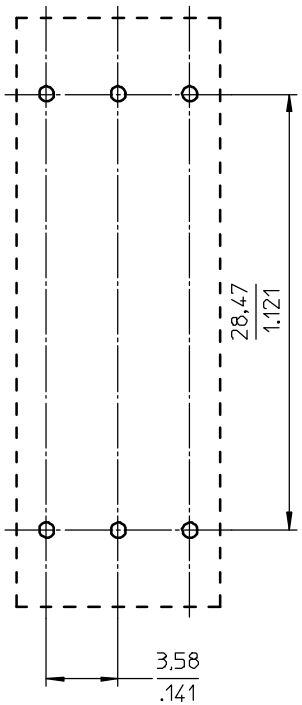


| | |
|---|---|
| Coil former material. | Zytel FR50 (PA6.6), glass-reinforced. UL file number: E41938 - UL94V-0. |
| max. operating temp: | 130°C, class B |
| pin material: | CuZn, Sn plated. |
| solderability: | acc. to IEC 60 068-2-20 part2, Test Ta method 1, 235°C-2sec. |
| mean length of turn: | 2.073 inch (52,7 mm) |
| winding area: | 0.061 sq. inch. (39,4 $mm^2$) |

| | | | |
|---|---|---|---|
| CLASS,NO. | CPV-P26/16-1S-6PDL-Z | 4335 060 26591 | 05-09-26 |
| NAME NAAM Veekens | SUPERS. VERY. | SH BL. SH BL. 112 – 001 | A3 |
| MPA CHECK CONTR. | DAT. 05-09-26 | Property of Eigendom van | © FERROXCUBE 2000 |