100mA Current Sink VCM Driver with I²C Interface

DESCRIPTION

The EUM6820 is a single 10-bit DAC with 100mA output current sink capability. It features an internal reference, I²C interface, 10 bits DAC and current sense resistor. The DAC is controlled via a 2-wire (I²C compatible) serial interface that operates at clock rates up to 400kHz. The EUM6820 can operates from 2.3V to 5.5V.

The EUM6820 incorporates a power-on reset circuit, which ensures that DAC output powers up to 0V and remains there until a valid write takes place. It has a power-down feature that reduces the current consumption of the device to 1μA maximum.

The EUM6820 principally designed for linear control of voice coil motors, targeting at autofocus, image stabilization, and optical zoom applications in camera phones , digital still cameras, and camcorders. While it may also used in many industrial applications, such as controlling temperature, light, and movement.

The I²C address for the EUM6820 is 0×18.

FEATURES

- 100mA current sink
- 2-wire (I²C-compatible) 1.8V serial interface
- 10-bit resolution DAC
- 2.3V to 5.5V power supply
- Guaranteed monotonic over all codes
- Power-down to 0.5μA typical
- Internal reference
- Current sense resistor integrated
- Power-down function
- Power-on reset
- Available in 1.0mm×1.5mm WCSP-6 package
- RoHS compliant and 100% lead (Pb)-free

APPLICATIONS

- Camera phones
- Digital still cameras
- Web/PC cameras
- Digital video cameras/camcorders
- Lens autofocus
- Lens covers
- Optical zoom
- Image stabilization
- Shutters
- Neutral density filters

Application Circuit

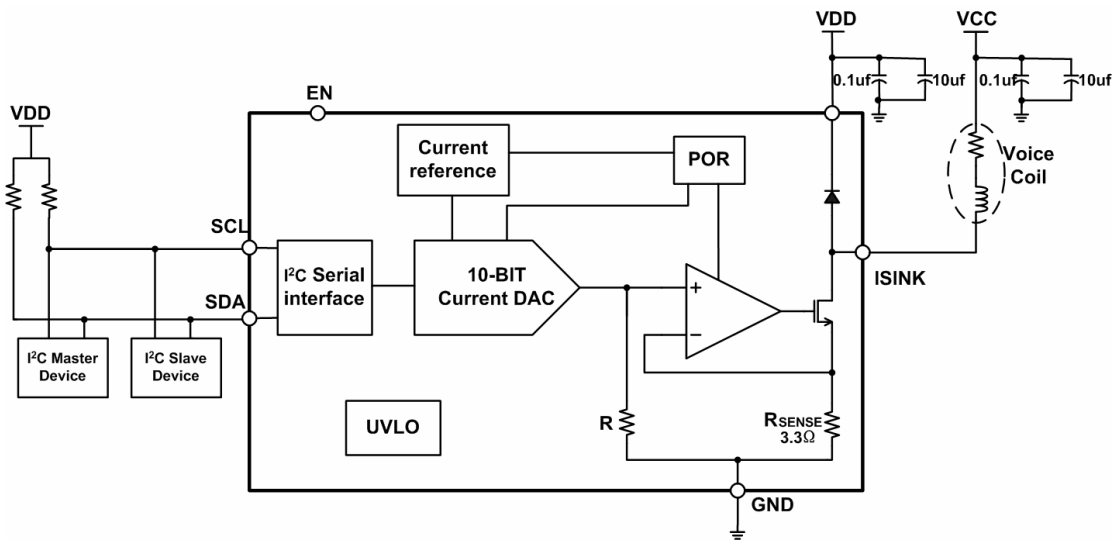

Figure 1. Application Circuit