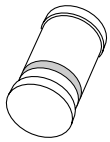

PMLL4148L; PMLL4448

High-speed switching diodes

Rev. 07 — 31 January 2007 Product data sheet

1. Product profile

1.1 General description

Single high-speed switching diodes, fabricated in planar technology, and encapsulated in small hermetically sealed glass SOD80C Surface-Mounted Device (SMD) packages.

Table 1. Product overview

Type number	Package	Configuration
PMLL4148L	SOD80C	single
PMLL4448		

1.2 Features

- High switching speed: $t_{rr} \leq 4$ ns
- Reverse voltage: $V_R \leq 75$ V
- Repetitive peak reverse voltage: $V_{RRM} \leq 100$ V
- Repetitive peak forward current: $I_{FRM} \leq 450$ mA
- Small hermetically sealed glass SMD package

1.3 Applications

- High-speed switching
- Reverse polarity protection

1.4 Quick reference data

Table 2. Quick reference data

Symbol	Parameter	Conditions		Min	Typ	Max	Unit
I_F	forward current		[1]	-	-	200	mA
I_{FRM}	repetitive peak forward current			-	-	450	mA
V_R	reverse voltage			-	-	75	V

founded by Philips

Table 2. Quick reference data *...continued*

Symbol	Parameter	Conditions	Min	Typ	Max	Unit
V_F	forward voltage					
	PMLL4148L	I_F = 50 mA	-	-	1	V
	PMLL4448	I_F = 5 mA	620	-	720	mV
		I_F = 100 mA	-	-	1	V
t_{rr}	reverse recovery time	[2]	-	-	4	ns

[1] Device mounted on an FR4 Printed-Circuit Board (PCB), single-sided copper, tin-plated and standard footprint.

[2] When switched from I_F = 10 mA to I_R = 60 mA; R_L = 100 Ω; measured at I_R = 1 mA.

2. Pinning information

Table 3. Pinning

Pin	Description	Simplified outline	Symbol
1	cathode [1]		 sym006
2	anode		

[1] The marking band indicates the cathode.

3. Ordering information

Table 4. Ordering information

Type number	Package		
	Name	Description	Version
PMLL4148L	-	hermetically sealed glass surface-mounted package; 2 connectors	SOD80C
PMLL4448			

4. Marking

Table 5. Marking codes

Type number	Marking code[1]
PMLL4148L	marking band
PMLL4448	marking band

[1] black: made in Philippines
brown: made in China

5. Limiting values

Table 6. Limiting values

In accordance with the Absolute Maximum Rating System (IEC 60134).

Symbol	Parameter	Conditions		Min	Max	Unit
V_{RRM}	repetitive peak reverse voltage			-	100	V
V_R	reverse voltage			-	75	V
I_F	forward current		[1]	-	200	mA
I_{FRM}	repetitive peak forward current			-	450	mA
I_{FSM}	non-repetitive peak forward current	square wave	[2]			
		t_p = 1 µs		-	4	A
		t_p = 1 ms		-	1	A
		t_p = 1 s		-	0.5	A
P_{tot}	total power dissipation	T_{amb} = 25 °C	[1]	-	500	mW
T_j	junction temperature			-	200	°C
T_{amb}	ambient temperature			–65	+200	°C
T_{stg}	storage temperature			–65	+200	°C

[1] Device mounted on an FR4 PCB, single-sided copper, tin-plated and standard footprint.

[2] T_j = 25 °C prior to surge.

6. Thermal characteristics

Table 7. Thermal characteristics

Symbol	Parameter	Conditions		Min	Typ	Max	Unit
$R_{th(j-a)}$	thermal resistance from junction to ambient	in free air	[1]	-	-	350	K/W
$R_{th(j-sp)}$	thermal resistance from junction to solder point			-	-	300	K/W

[1] Device mounted on an FR4 PCB, single-sided copper, tin-plated and standard footprint.

7. Characteristics

Table 8. Characteristics

T_{amb} = 25 °C unless otherwise specified.

Symbol	Parameter	Conditions		Min	Typ	Max	Unit
V_F	forward voltage						
	PMLL4148L	I_F = 50 mA		-	-	1	V
	PMLL4448	I_F = 5 mA		620	-	720	mV
		I_F = 100 mA		-	-	1	V
I_R	reverse current	V_R = 20 V		-	-	25	nA
		V_R = 20 V; T_j = 150 °C		-	-	50	µA
I_R	reverse current						
	PMLL4448	V_R = 20 V; T_j = 100 °C		-	-	3	µA
C_d	diode capacitance	V_R = 0 V; f = 1 MHz		-	-	4	pF
t_{rr}	reverse recovery time		[1]	-	-	4	ns
V_{FR}	forward recovery voltage		[2]	-	-	2.5	V

[1] When switched from I_F = 10 mA to I_R = 60 mA; R_L = 100 Ω; measured at I_R = 1 mA.

[2] When switched from I_F = 50 mA; t_r = 20 ns.

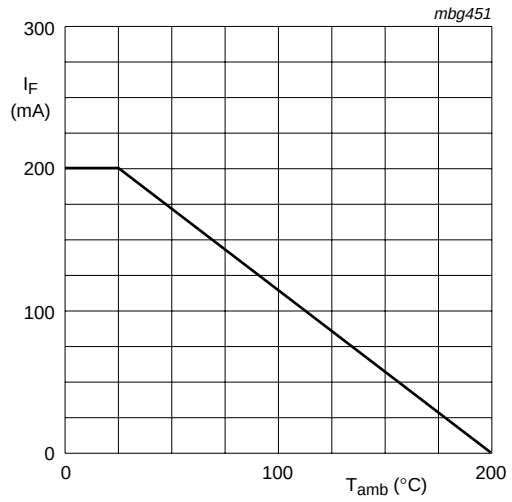

FR4 PCB, standard footprint

Fig 1. Forward current as a function of ambient temperature; derating curve

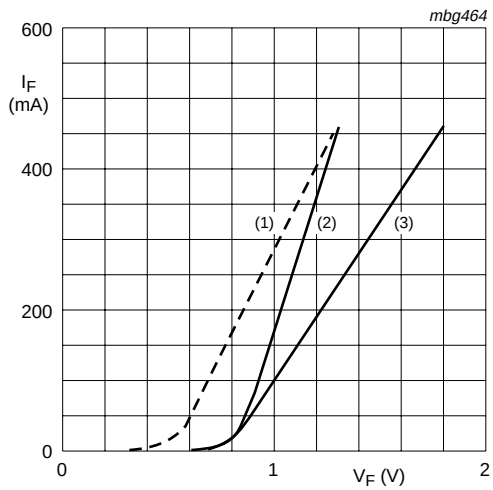

(1) T_j = 175 °C; typical values

(2) T_j = 25 °C; typical values

(3) T_j = 25 °C; maximum values

Fig 2. Forward current as a function of forward voltage

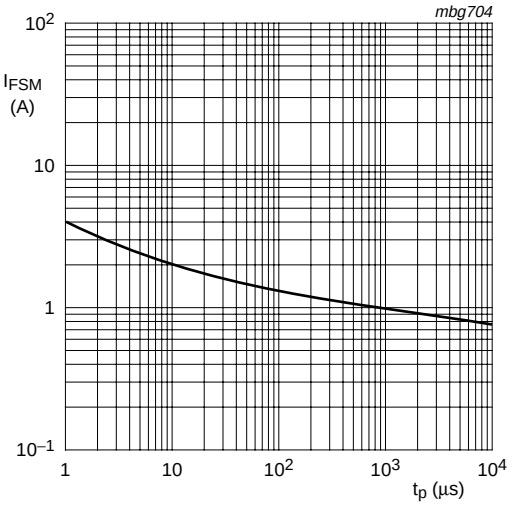

Based on square wave currents.

T_j = 25 °C; prior to surge

Fig 3. Non-repetitive peak forward current as a function of pulse duration; maximum values

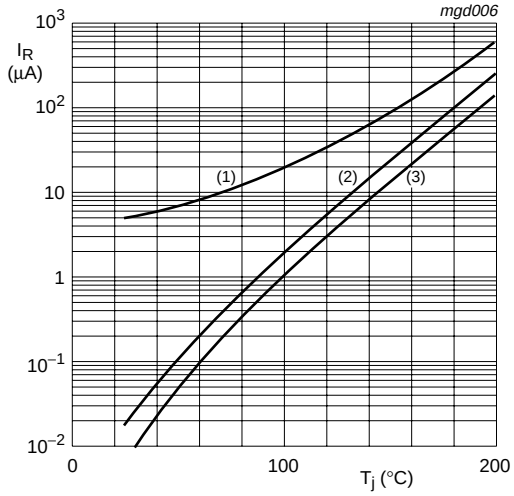

(1) V_R = 75 V; maximum values

(2) V_R = 75 V; typical values

(3) V_R = 20 V; typical values

Fig 4. Reverse current as a function of junction temperature

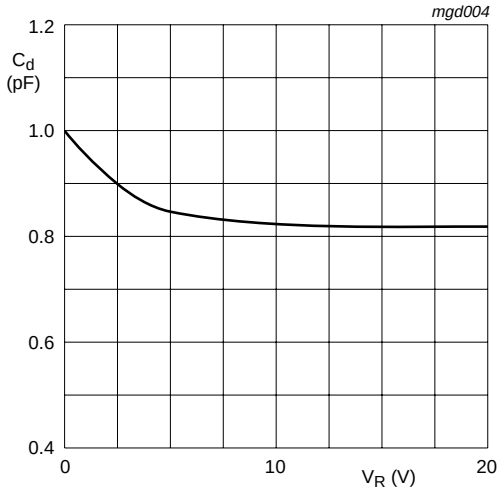

f = 1 MHz; T_j = 25 °C

Fig 5. Diode capacitance as a function of reverse voltage; typical values

8. Test information

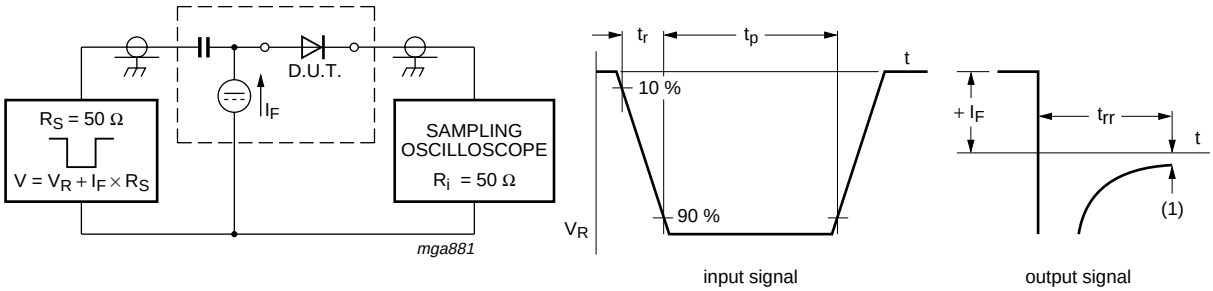

(1) I_R = 1 mA

Input signal: reverse pulse rise time t_r = 0.6 ns; reverse voltage pulse duration t_p = 100 ns; duty cycle δ ≤ 0.05

Oscilloscope: rise time t_r = 0.35 ns

Fig 6. Reverse recovery time test circuit and waveforms

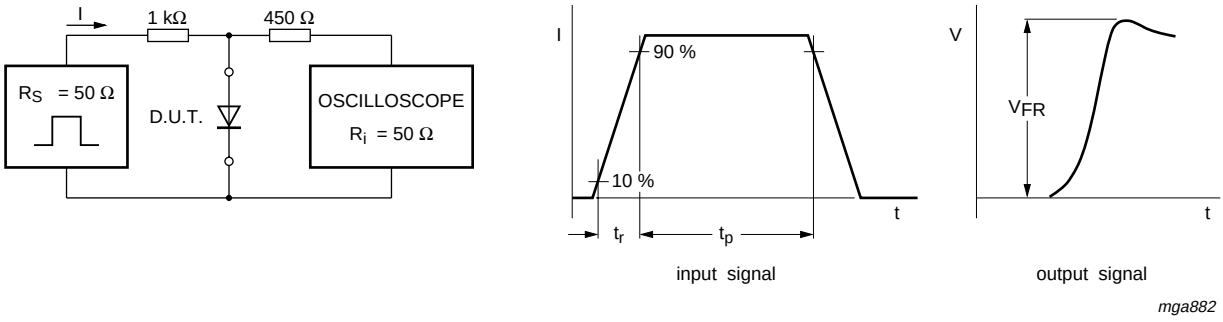

Input signal: forward pulse rise time t_r = 20 ns; forward current pulse duration t_p ≥ 100 ns; duty cycle δ ≤ 0.005

Fig 7. Forward recovery voltage test circuit and waveforms

9. Package outline

Hermetically sealed glass surface-mounted package; 2 connectors **SOD80C**

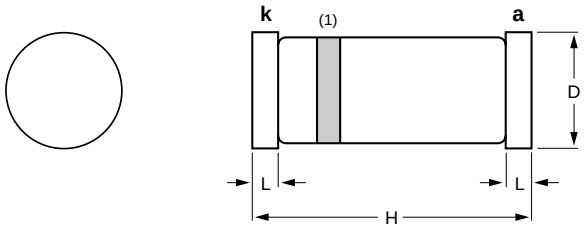

DIMENSIONS (mm are the original dimensions)

UNIT	D	H	L
mm	1.60 1.45	3.7 3.3	0.3

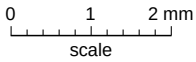

Note

1. The marking band indicates the cathode.

OUTLINE VERSION	REFERENCES				EUROPEAN PROJECTION	ISSUE DATE
	IEC	JEDEC	JEITA			
SOD80C	100H01					~~05-01-26~~ 06-03-16

Fig 8. Package outline SOD80C

10. Packing information

Table 9. Packing methods

The indicated -xxx are the last three digits of the 12NC ordering code.[1]

Type number	Package	Description	Packing quantity	
			2500	10000
PMLL4148L	SOD80C	4 mm pitch, 8 mm tape and reel	-115	-135
PMLL4448				

[1] For further information and the availability of packing methods, see Section 14.

11. Soldering

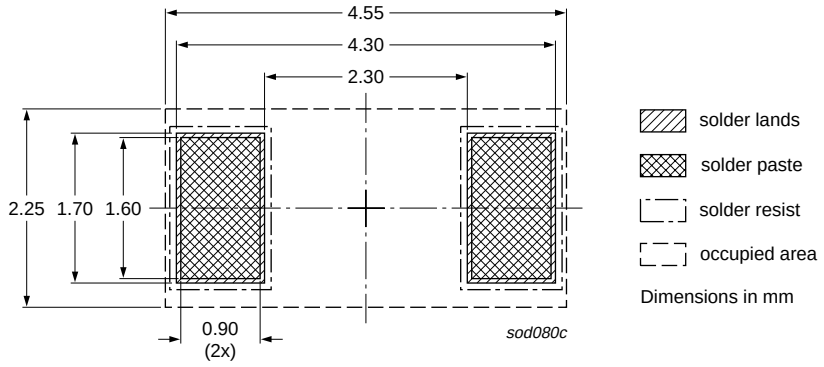

Fig 9. Reflow soldering footprint SOD80C

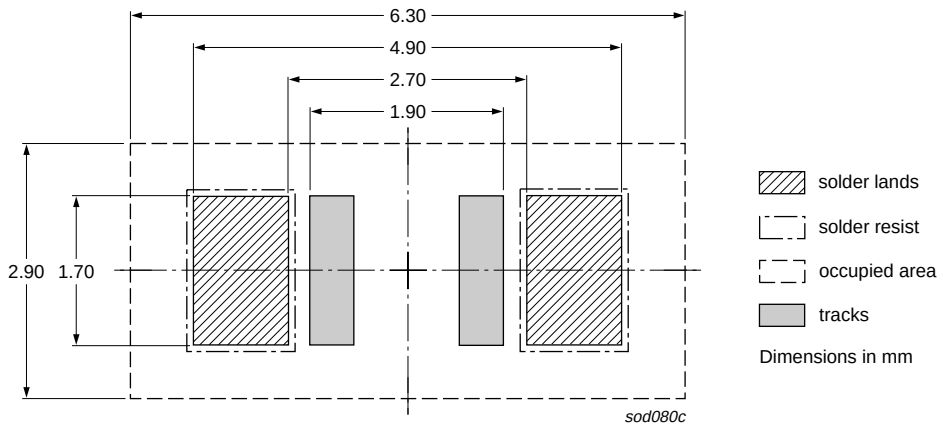

Fig 10. Wave soldering footprint SOD80C

12. Revision history

Table 10. Revision history

Document ID	Release date	Data sheet status	Change notice	Supersedes
PMLL4148L_PMLL4448_7	20070131	Product data sheet	-	PMLL4148L_PMLL4448_6
Modifications:	• The format of this data sheet has been redesigned to comply with the new identity guidelines of NXP Semiconductors. • Legal texts have been adapted to the new company name where appropriate. • Section 1.2 “Features”: adapted • Section 1.3 “Applications”: amended • Table 2 “Quick reference data”: V_F conditions for PMLL4148L updated • Table 8 “Characteristics”: V_F conditions for PMLL4148L updated • Figure 4: unit for I_R in axis description amended to µA • Section 13 “Legal information”: updated			
PMLL4148L_PMLL4448_6	20050404	Product data sheet	-	PMLL4148L_4448_5
PMLL4148L_4448_5	20020123	Product specification	-	PMLL4148L_4448_4
PMLL4148L_4448_4	20001115	Product specification	-	PMLL4148_3
PMLL4148_3	19990527	Product specification	-	PMLL4148_2
PMLL4148_2	19960918	Product specification	-	PMLL4148_1
PMLL4148_1	19960423	Product specification	-	-

13. Legal information

13.1 Data sheet status

Document status[1][2]	Product status[3]	Definition
Objective [short] data sheet	Development	This document contains data from the objective specification for product development.
Preliminary [short] data sheet	Qualification	This document contains data from the preliminary specification.
Product [short] data sheet	Production	This document contains the product specification.

[1] Please consult the most recently issued document before initiating or completing a design.

[2] The term 'short data sheet' is explained in section "Definitions".

[3] The product status of device(s) described in this document may have changed since this document was published and may differ in case of multiple devices. The latest product status information is available on the Internet at URL http://www.nxp.com.

13.2 Definitions

Draft — The document is a draft version only. The content is still under internal review and subject to formal approval, which may result in modifications or additions. NXP Semiconductors does not give any representations or warranties as to the accuracy or completeness of information included herein and shall have no liability for the consequences of use of such information.

Short data sheet — A short data sheet is an extract from a full data sheet with the same product type number(s) and title. A short data sheet is intended for quick reference only and should not be relied upon to contain detailed and full information. For detailed and full information see the relevant full data sheet, which is available on request via the local NXP Semiconductors sales office. In case of any inconsistency or conflict with the short data sheet, the full data sheet shall prevail.

13.3 Disclaimers

General — Information in this document is believed to be accurate and reliable. However, NXP Semiconductors does not give any representations or warranties, expressed or implied, as to the accuracy or completeness of such information and shall have no liability for the consequences of use of such information.

Right to make changes — NXP Semiconductors reserves the right to make changes to information published in this document, including without limitation specifications and product descriptions, at any time and without notice. This document supersedes and replaces all information supplied prior to the publication hereof.

Suitability for use — NXP Semiconductors products are not designed, authorized or warranted to be suitable for use in medical, military, aircraft, space or life support equipment, nor in applications where failure or malfunction of a NXP Semiconductors product can reasonably be expected to result in personal injury, death or severe property or environmental damage. NXP Semiconductors accepts no liability for inclusion and/or use of NXP Semiconductors products in such equipment or applications and therefore such inclusion and/or use is at the customer's own risk.

Applications — Applications that are described herein for any of these products are for illustrative purposes only. NXP Semiconductors makes no representation or warranty that such applications will be suitable for the specified use without further testing or modification.

Limiting values — Stress above one or more limiting values (as defined in the Absolute Maximum Ratings System of IEC 60134) may cause permanent damage to the device. Limiting values are stress ratings only and operation of the device at these or any other conditions above those given in the Characteristics sections of this document is not implied. Exposure to limiting values for extended periods may affect device reliability.

Terms and conditions of sale — NXP Semiconductors products are sold subject to the general terms and conditions of commercial sale, as published at http://www.nxp.com/profile/terms, including those pertaining to warranty, intellectual property rights infringement and limitation of liability, unless explicitly otherwise agreed to in writing by NXP Semiconductors. In case of any inconsistency or conflict between information in this document and such terms and conditions, the latter will prevail.

No offer to sell or license — Nothing in this document may be interpreted or construed as an offer to sell products that is open for acceptance or the grant, conveyance or implication of any license under any copyrights, patents or other industrial or intellectual property rights.

13.4 Trademarks

Notice: All referenced brands, product names, service names and trademarks are the property of their respective owners.

14. Contact information

For additional information, please visit: **http://www.nxp.com**

For sales office addresses, send an email to: **salesaddresses@nxp.com**

15. Contents

For more information, please visit: http://www.nxp.com
For sales office addresses, please send an email to: salesaddresses@nxp.com

Date of release: 31 January 2007
Document identifier: PMLL4148L_PMLL4448_7