P-tec Corp.
2405 Commerce Circle
Alamosa Co. 81101
www.p-tec.net

Tel:(800)688-0613
Tel:(719) 589 3122
Fax:(719) 589 3592
sales@p-tec.net

PL314A Series 3mm LED Right Angle Quad Level Holder

Features

*Space Saving Quad Level PCB Indicator with embedded LEDs
*Housing Material Black Nylon UL94V-2
*High Light Output
*4 Yellow LEDs with Color Diffused Lens used
*LEDs arranged from Top to Bottom
*RoHS Compliant

Absolute Maximum Ratings at T_A = 25°C

Power Dissipation	78mW
Reverse Voltage (<100 µA)	5.0V
Max Forward Current	30mA
Peak Forward Current (1/10 Duty Cycle, 0.1ms Pulse Width)	100mA
Operating Temperature Range	-25°C to +85°C
Storage Temperature Range	-40°C to +100°C
Soldering Temperature (1.6 mm below body)	260°C for 5 seconds

Electrical & Optical Characteristics at T_A = 25°C

Part Number	Emitting Color	Chip Material	Peak Wave Length	Dominant Wave Length	Viewing Angle 2θ ½	Forward Voltage @20mA (V)		Lumious Intensity @20mA (mcd)	
Color Diffused Lens			nm	nm	Deg	Typ	Max	Typ	Max
PL314A-4Y01	Yellow	GaAsP	585	590	55°	2.1	2.6	9.0	20.0
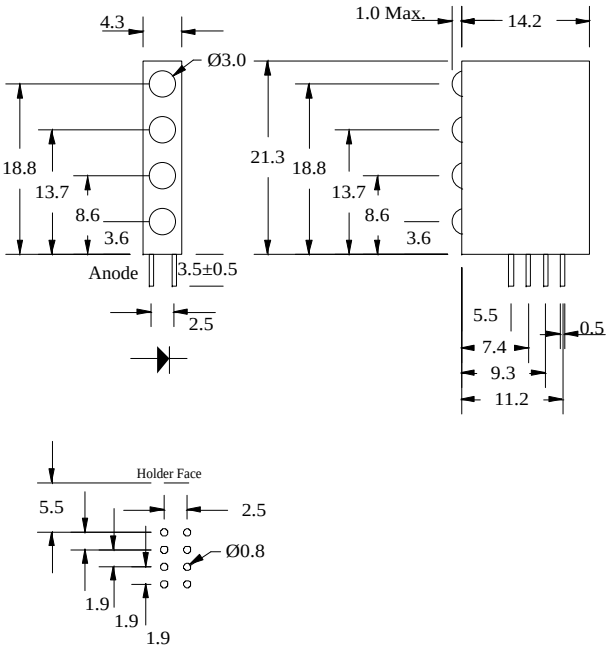
All dimensions are in **Millimeters**. Tolerance is ± 0.25mm unless otherwise specified.