140 MHz Bandpass SAW Filter

44 MHz Bandwidth

BP62060

Complies with Directive 2002/95/EC (RoHS Compliant)

Electrical Characteristics					
Parameter	Sym	Minimum	Typical	Maximum	Unit
Center Frequency at 25°C	f_c	139.75	140	140.25	MHz
Insertion Loss at fc	*IL*	-	23.0	25.0	dB
1 dB Bandwidth	BW_1	41.4	41.8	-	MHz
3 dB Bandwidth	BW_3	44.0	44.5	-	MHz
40dB Bandwidth	BW_{40}	-	54.28	55.0	MHz
Phase Linearity	-	-	4.7	6	Degrees
Passband Variation	$\Delta\alpha$	-	0.58	0.7	dB
Group Delay Variation	$\Delta\tau$	-	9	30	nSec
Absolute Delay	τ	-	0.988	-	µSec
Ultimate Rejection	α_{rej}	50	55	-	dB
Substrate Material	-	-	128 $LiNbO_3$	-	-
Ambient Temperature	*Ta*	-	25	-	°C
Package	-	DIP 2212			

Typical Performance

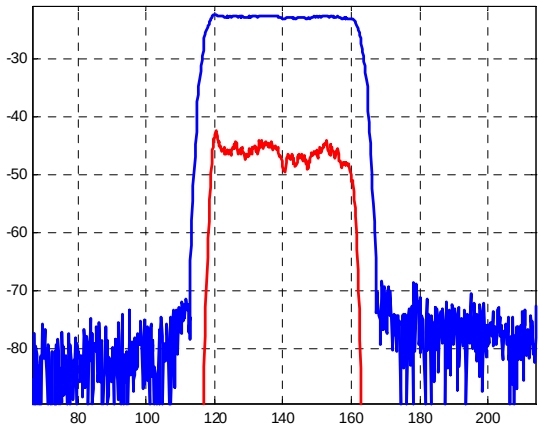

Package Outline

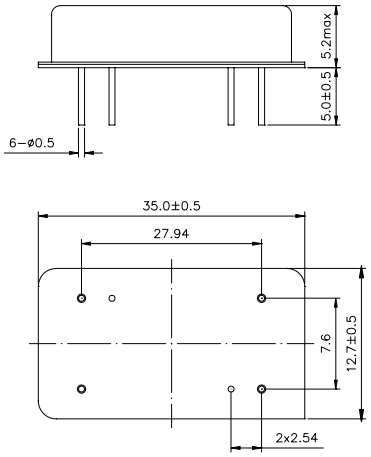

Matching Configuration

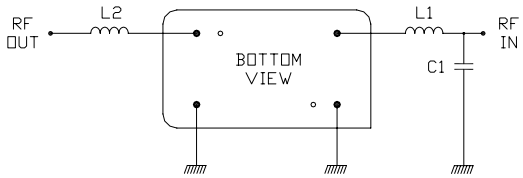

L1 = 82 nH L2 = 56 + 27 nH

C1 = 20 pF

Nominal Source/Load Impedance : 50 Ω

Note: Component values may change depending on board layout.

Phone: +86 (10) 5820 3910 Fax: +86 (10) 5820 3915 Email: sales@vanlong.com Web: http://www.vanlong.com

©2007 by Vanlong Technology Co., Ltd.