PRELIMINARY DATA SHEET

SKY77181 Power Amplifier Module for WCDMA / HSDPA (880–915 MHz)

Applications

- WCDMA Handsets
- HSDPA Handsets
- Personal Communications Services (PCS)
- Wireless local loop (WLL)

Features

- No V_{REF} required
- Low voltage positive bias
  - 3.1 V to 4.6 V
- Supports low collector voltage operation
- Good linearity
- High efficiency at all power levels (13.5% at 15 dBm)
- Large dynamic range
- Low Profile package
  - 3 x 3 x 1.1 mm
- 8-pad configuration
- Power down control
- InGaP
- Digital V_{ENABLE}
- Digital or Analog $V_{CONTROL}$

NEW Skyworks offers lead (Pb)-free, RoHS (Restriction of Hazardous Substances)-compliant packaging.

Description

The SKY77181 Power Amplifier module is a fully matched 8-pad surface mount module developed for Wideband Code Division Multiple Access (WCDMA) applications. This small and efficient power amplifier packs full coverage of the 880–915 MHz bandwidth into a single compact package. The SKY77181 meets the stringent spectral linearity requirements of High Speed Downlink Packet Access (HSDPA) data transmission with high power added efficiency for power output of up to 28 dBm. Because of high efficiencies attained throughout the entire power range, the SKY77181 delivers unsurpassed talk-time advantages.

The single Gallium Arsenide (GaAs) Microwave Monolithic Integrated Circuit (MMIC) contains all active circuitry in the module. The MMIC includes on-board bias circuitry, as well as input and interstage matching circuits. The output match is realized off-chip within the module package to optimize efficiency and power performance into a 50 Ω load. This device is manufactured with Skyworks' InGaP GaAs Heterojunction Bipolar Transistor (HBT) process that provides for all positive voltage DC supply operation while maintaining high efficiency and good linearity. Primary bias to the SKY77181 is supplied directly from a three-cell Ni-Cd, a single-cell Li-Ion, or other suitable battery with an output in the 3.1 to 4.6 volt range. No V_{REF} voltage is required. Power down is accomplished by setting the voltage on V_{ENABLE} to zero volts. Digital bias control can be used to optimize efficiency at high and low power or analog bias control can be used to optimize efficiency over the entire power range. No external supply side switch is needed as typical "off" leakage is a few microamperes with full primary voltage supplied from the battery.

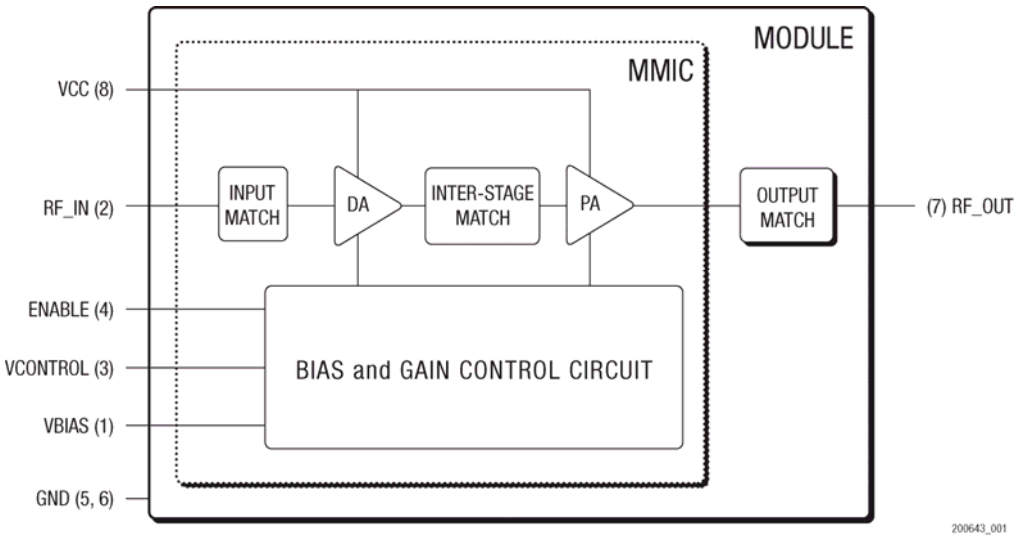

Figure 1. SKY77181 Functional Block Diagram

Electrical Target Specifications

The following tables list the electrical characteristics of the SKY77181 Power Amplifier. Table 1 lists the absolute maximum ratings, while Table 2 shows the recommended operating conditions to achieve the performance characteristics for WCDMA and HSDPA listed, respectively, in Table 4 and Table 6.

Table 3 lists the recommended Supply and Control voltage conditions over Output Power. Standard test configurations for WCDMA and HSDPA are shown in Table 5 and Table 7, respectively,.

Table 1. Absolute Maximum Ratings [1]

Parameter		Symbol	Minimum	Maximum	Unit
RF Input Power		P_{IN}	—	9	dBm
Supply Voltage		V_{CC}, V_{BIAS} (no RF)	—	7	Volts
Control Voltage		V_{CONT}	0	1.5	Volts
Enable Voltage		V_{EN}	—	3	Volts
Case Temperature	Operating	T_{CASE}	–30	110	°C
	Storage	T_{STG}	–55	125	
Ruggedness – no damage [2]		Ru	—	10:1	VSWR

[1] No damage assuming only one parameter is set at limit at a time with all other parameters set at nominal value.

[2] P_{O_MAX}, all phases, time = 10 sec, continuous modulated signal.

Table 2. Recommended Operating Conditions

Parameter		Symbol	Minimum	Nominal	Maximum	Unit
RF Output Power	WCDMA	P_{O_MAX}	—	—	28.5	dBm
	HSDPA		—	—	28.0	
Operating Frequency		F_O	880.0	897.5	915.0	MHz
Supply Voltage [1]	V_{BATT}	V_{CC}	3.1	3.4	4.6	Volts
	DC/DC		0.5	3.4	3.4	
Bias Voltage		V_{BIAS}	3.4	3.6	4.6	Volts
Enable Voltage	PA On	V_{EN}	1.3	—	2.75	Volts
	PA Off		0.0	—	0.4	
$V_{CONTROL}$ Range		V_{CONT}	0.6	—	1.2	Volts
Load Mismatch (all angles)		VSWR	—	1	—	VSWR
Case Operating Temperature		T_{CASE}	–20	+25	+85	°C

[1] When V_{CC} supply is 3.1 V, P_{O_MAX} must be backed off 1 dB.

Table 3. Recommended Supply Voltage (V_{CC}) and Control Voltage (V_{CONT}) Conditions Over Output Power (P_O)

P_{SET} (dBm)		V_{CONT}	V_{CC}
WCDMA	HSDPA		
–20	–21	0.72	1.15
–10	–11	0.72	1.15
–5	–6	0.81	1.17
0	–1	0.92	1.20
5	4	1.05	1.25
10	9	1.05	1.45
15	14	1.10	1.63
20	19	1.10	2.00
23	22	1.10	2.35
25	24	1.10	2.70
26	25	1.10	2.85
27	26	1.10	3.10
28	27	1.10	3.40
28.5	28	1.10	3.40

Table 4. SKY77181 Electrical Specifications for WCDMA — Recommended Operating Conditions [1]

Refer to Table 5. Standard Test Configuration — WCDMA Voice Mode (Uplink Reference Measurement Channel: 12.2 kbps)

WCDMA (Wideband Code Division Multiple Access) [2]							
Characteristics		**Symbol**	**Condition**	**Minimum**	**Typical**	**Maximum**	**Unit**
Gain Conditions	High Power	G_{HIGH}	P_{O_MAX}	27.0	30.0	33.0	dB
	Low Power	G_{LOW}	P_O = –10 dBm	12.5	16.0	19.5	
Gain Variation Over Frequency			Fixed V_{CC}, Temp, P_{IN}	—	—	1	dB
Power Added Efficiency	High Power	PAE_{HIGH}	P_{O_MAX} T_{CASE} = +25 °C	36.0	—	—	%
	Low Power	PAE_{LOW}	P_O = 15 dBm T_{CASE} = +25 °C	12.5	—	—	
Error Vector Magnitude		EVM	—	—		5	%
Adjacent Channel Leakage power Ratio [3]	5 MHz	ACLR1_H	P_{O_MAX}	—	–38.0	–35.5	dBc
		ACLR1_L	$P_O \leq$ 9 dBm	—	–45.0	–42.0	
	10 MHz	ACLR2_H	P_{O_MAX}	—	–50.0	–48.0	
		ACLR2_L	$P_O \leq$ 9 dBm	—	–56.0	–53.0	
Harmonic Suppression	Second	fH2	V_{CC} = 3.4 V	—	–8	0	dBm/1 MHz
	Third	fL3		—	–46	–30	
Noise Power		P_N_WRX	Band VIII_RX: 925–960 MHz, 45 MHz duplex	—	–90	–88	dBm/30 kHz
		P_N_WRX2	$WCDMA_{RX}$ = 925 MHz $WCDMA_{TX}$ = 915 MHz	—	–69	–65	
		P_N_GPS	A-GPS Band: 1570–1580 MHz	—	–110	–100	
		P_N_DCS	$WCDMA_{RX}$ = 1805–1880 MHz	—	–111	–100	
		P_N_UMTS	2110–2170 MHZ	—	–112	–100	
		P_N_BT1	2400–2480 MHz	—	–107	–90	
Input Voltage Standing Wave Ratio (VSWR)		VSWR	—	—	1.5	2.0	—
Stability		S	VSWR = 6:1 all phases	—	—	–46	dBm
Total Current		I_{TOTAL}	P_{O_MAX}		550	578	mA
Quiescent Current		I_{CQ}	V_{CC} = 1.5 V V_{CONT} = 1.0 V, no RF	—	50	75	mA
Control Current		I_{CONT}	—	—	—	500	µA
Digital Enable Current		I_{EN}	$V_{EN} \geq$ 1.0 V	—	—	5	µA
Leakage Current		I_{LEAK}	V_{REF} = off V_{EN} = off	—	5	10	µA

1 Refer to conditions in Table 2 and Table 3, unless otherwise specified.

2 Data in this Table were verified with the signal configuration shown in Table 5.

3 ACLR is specified per 3GPP as the ratio of total in-band power to adjacent power, both measured in 3.84 MHz bandwidth at specified offsets.

Table 5. Standard Test Configuration — WCDMA Voice Mode (Uplink Reference Measurement Channel: 12.2 kbps)

Parameter	Level	Spread Code	Spread Factor	I/Q	βc	βd	βhs	Relative Power
Information Bit Rate	12.2 kbps	—	—	—	—	—	—	
DPCCH	15.0 kbps	0	256	Q	8/15	—	—	–6.57 dB
DPDCH	60.0 kbps	16	64	I	—	15/15	—	–1.087 dB
TFCI	ON	—	—	—	—	—	—	—

Table 6. SKY77181 Electrical Specifications for HSPDA — Recommended Operating Conditions [1]

Refer to Table 7: Standard Test Configuration — HSDPA Mode

HSDPA (High Speed Downlink Packet Access) [2]							
Characteristics		**Symbol**	**Condition**	**Minimum**	**Typical**	**Maximum**	**Unit**
Gain Conditions	High Power	G_{HIGH}	P_{O_MAX}	27.0	30.0	33.0	dB
	Low Power	G_{LOW}	P_O = –10 dBm	12.5	16.0	19.5	
Gain Variation Over Frequency			Fixed V_{CC}, Temp.	—	—	1	dB
Power Added Efficiency	High Power	PAE_{HIGH}	P_{O_MAX} T_{CASE} = +25 °C	34.0	36.0	—	%
	Low Power	PAE_{LOW}	P_O = 14 dBm T_{CASE} = +25 °C	11.0	12.0	—	
Error Vector Magnitude		EVM	—	—	—	5	%
Adjacent Channel Leakage power Ratio [3]	5 MHz offset	ACLR1_H	P_{O_MAX}	—	–38.0	–35.5	dBc
		ACLR1_L	V_{CONT} = 15 V P_O = 9 dBm	—	–45.0	–42.0	
	10 MHz offset	ACLR2_H	P_{O_MAX}	—	–52.0	–48.0	
		ACLR2_L	V_{CONT} = 15 V P_O = 9 dBm	—	–60.0	–53.0	

1 Refer to condition in Table 2 and Table 3, unless otherwise specified.

2 Data in this Table were verified with the signal configuration shown in Table 7.

3 ACLR is specified per 3GPP as the ratio of in-band power to adjacent power, both measured in 3.84 MHz bandwidth at specified offsets.

Table 7. Standard Test Configuration — HSDPA Mode

Parameter	Level	Spread Code	Spread Factor	I/Q	βc	βd	βhs	Relative Power
DPCCH	15 kbps	0	256	Q	12/15	—	—	–8.17 dB
DPDCH	60 kbps	16	64	I	—	15/15	—	–6.23 dB
HS– DPDCH	15 kbps	64	256	Q	—		24/15	–2.15 dB
TFCI	On	—	—	—	—	—	—	—

Evaluation Board Description

The evaluation board is a platform for testing and interfacing design circuitry. To accommodate the interface testing of the SKY77181, the evaluation board schematic and diagrams are included for preliminary analysis and design. Figure 2 shows the basic schematic of the board for the 880 MHz to 915 MHz range.

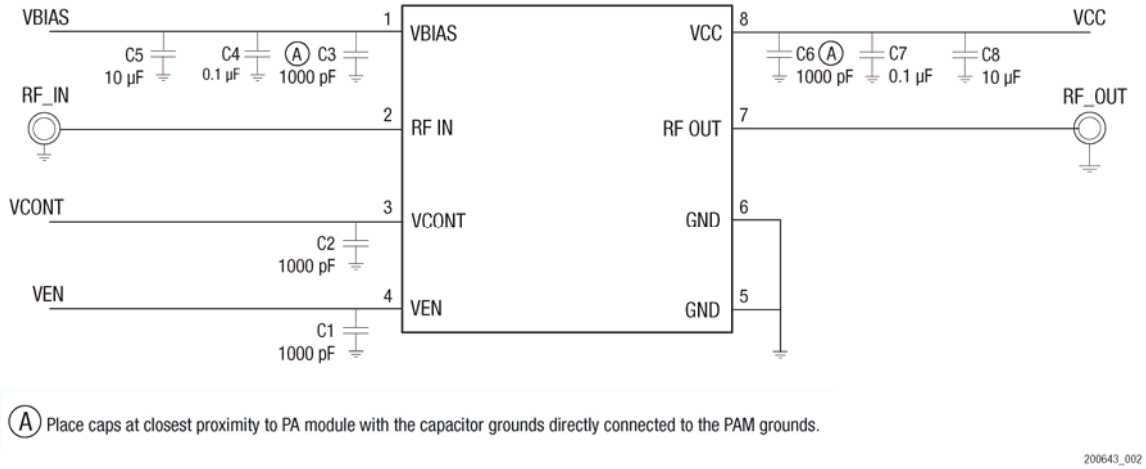

Figure 2. SKY77181 Evaluation Board Schematic

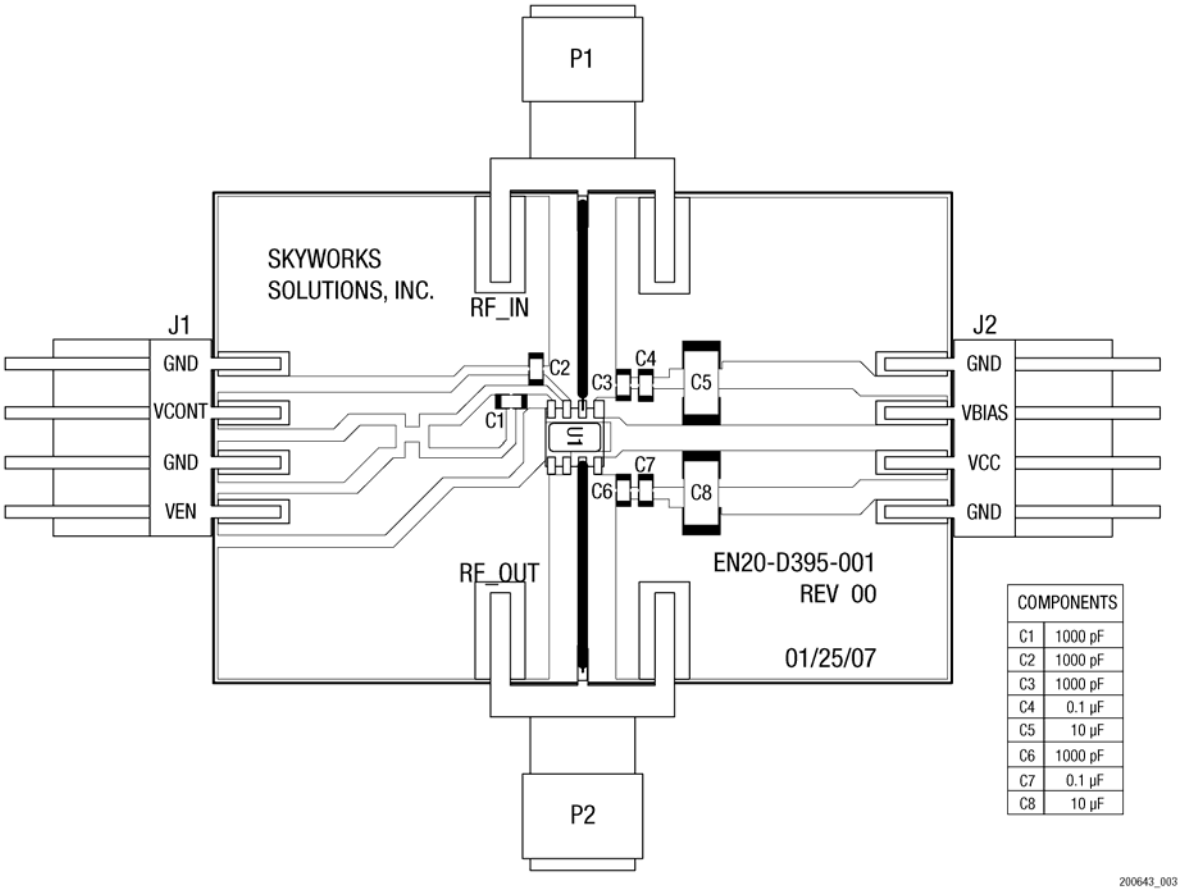

COMPONENTS	
C1	1000 pF
C2	1000 pF
C3	1000 pF
C4	0.1 µF
C5	10 µF
C6	1000 pF
C7	0.1 µF
C8	10 µF

Figure 3. SKY77181 Evaluation Board Assembly Diagram

Package Dimensions and Pad Descriptions

The SKY77181 is a multi-layer laminate base, overmold encapsulated modular package designed for surface mount solder attachment to a printed circuit board. Figure 4 is a mechanical drawing of the pad layout for this package. Figure 5 provides a recommended phone board layout footprint for the PAM to help the designer attain optimum thermal conductivity, good grounding, and minimum RF discontinuity for the 50-ohm terminals. Figure 6 shows the pad names and the pad numbering convention, which starts with pad 1 at the upper left, and increments counter-clockwise around the package. Figure 7 illustrates typical case markings.

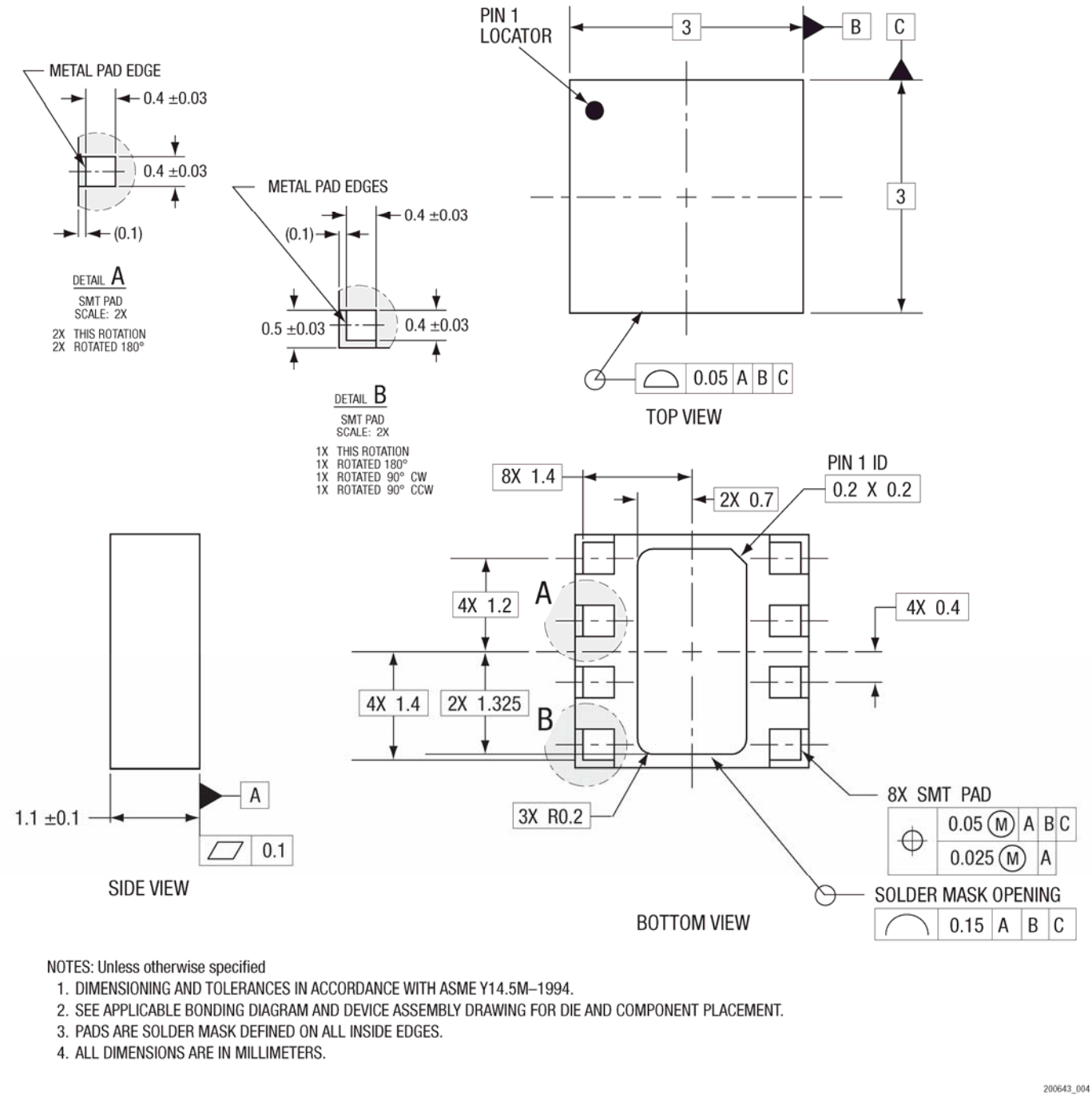

Figure 4. Dimensional Drawing for 3 x 3 x 1.1.1 mm, 8-pad Package – SKY77181 (All Views)

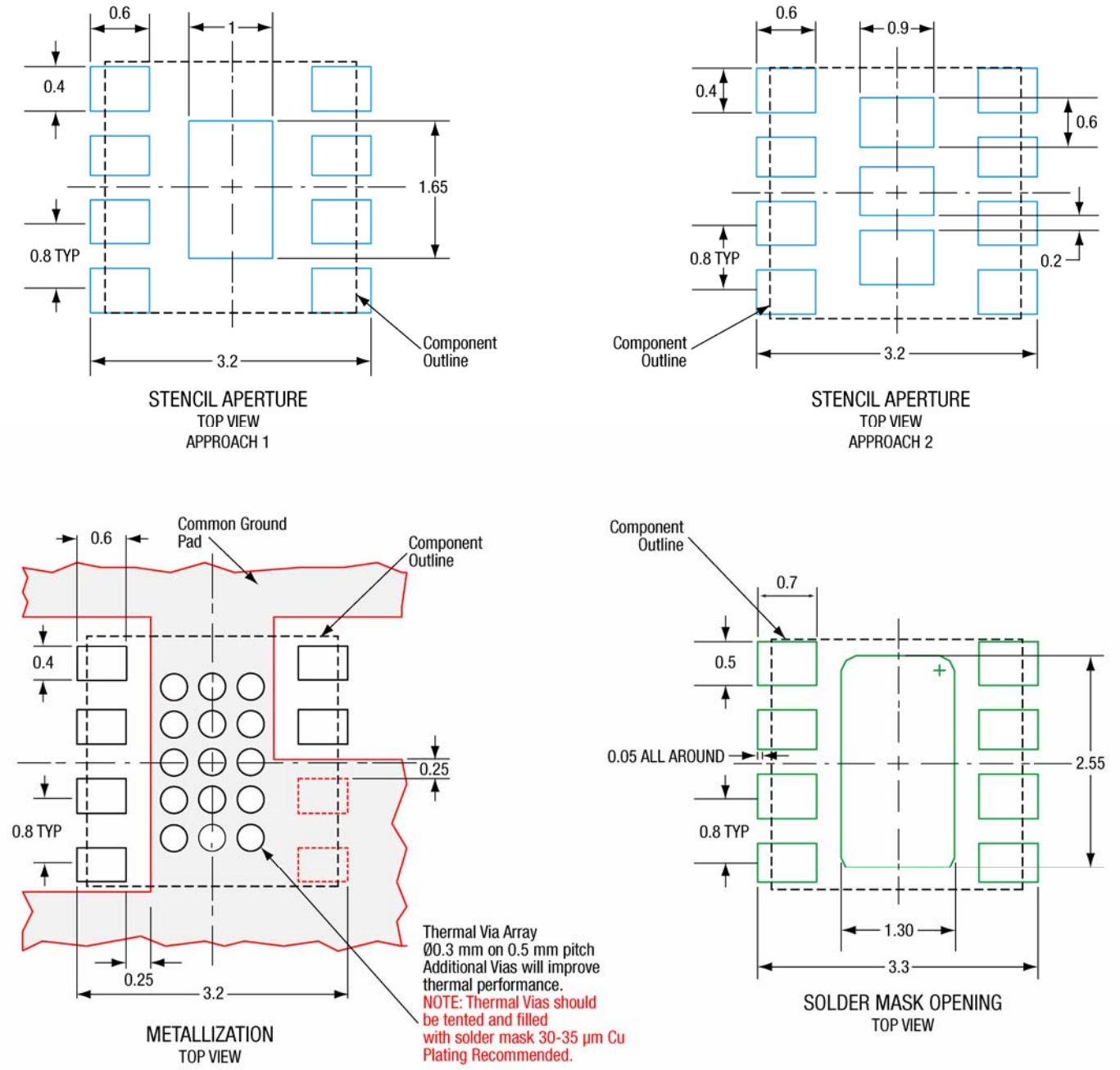

Figure 5. Phone PCB Layout Footprint for 3 x 3 x 1.1 mm, 8-pad Package – SKY77181

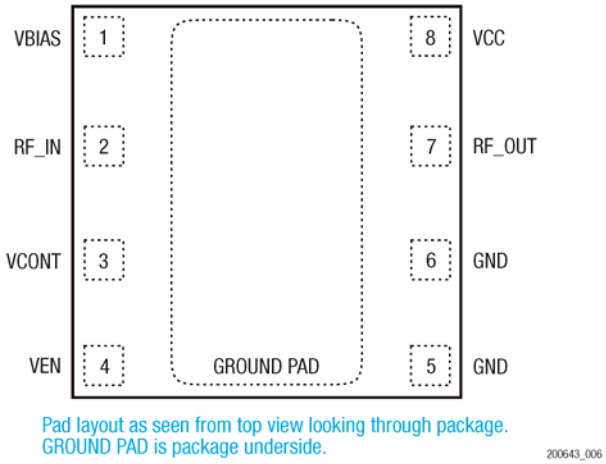

Figure 6. SKY77181 Pad Configuration

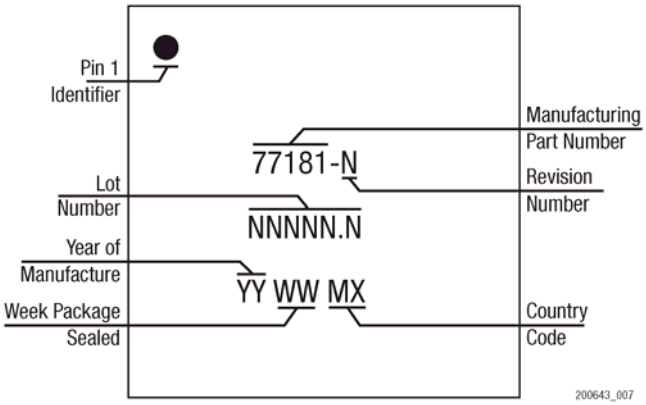

Figure 7. Typical Case Markings – 3 mm x 3 mm Package

Package and Handling Information

Because of its sensitivity to moisture absorption, this device package is baked and vacuum-packed prior to shipment. Instructions on the shipping container label must be followed regarding exposure to moisture after the container seal is broken, otherwise, problems related to moisture absorption may occur when the part is subjected to high temperature during solder assembly.

The SKY77181 is capable of withstanding an MSL3/260 ° C solder reflow. Care must be taken when attaching this product, whether it is done manually or in a production solder reflow environment. If the part is attached in a reflow oven, the temperature ramp rate should not exceed 3 °C per second; maximum temperature should not exceed 260 °C. If the part is manually attached, precaution should be taken to insure that the part is not subjected to temperatures exceeding 260 °C for more than 10 seconds. For details on attachment techniques, precautions, and handling procedures recommended by Skyworks, please refer to Skyworks Application Note: *PCB Design and SMT Assembly/Rework*, Document Number 101752. Additional information on standard SMT reflow profiles can also be found in the *JEDEC Standard J–STD–020*.

Production quantities of this product are shipped in the standard tape-and-reel format. For packaging details, refer to Skyworks Application Note: *Tape and Reel Information – RF Modules*, Document Number 101568.

Electrostatic Discharge Sensitivity

The SKY77181 is a Class 1 device. Figure 8 lists the Electrostatic Discharge (ESD) immunity level for each non-ground pad of the SKY77181 product. The numbers in Figure 8 specify the ESD threshold level for each pad where the I-V curve between the pad and ground starts to show degradation. ESD testing was performed in compliance with MIL-STD-883E Method 3015.7 using the Human Body Model. If ESD damage threshold magnitude is found to consistently exceed 2000 volts on a given pad, this so is indicated. If ESD damage threshold below 2000 volts is measured for either polarity, numbers are indicated that represent worst case values observed in product characterization.

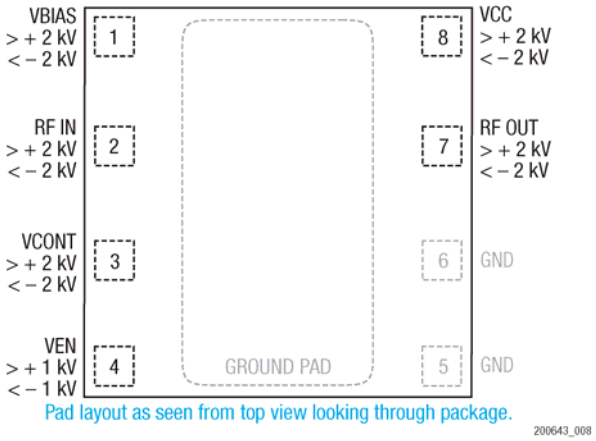

Figure 8. SKY77181 ESD Sensitivity Areas

Various failure criteria can be utilized when performing ESD testing. Many vendors employ relaxed ESD failure standards, which fail devices only after “the pad fails the electrical specification limits” or “the pad becomes completely non-functional”. Skyworks employs most stringent criteria, fails devices as soon as the pad begins to show any degradation on a curve tracer.

To avoid ESD damage, both latent and visible, it is very important that the product assembly and test areas follow the Class-1 ESD handling precautions listed below.

- Personnel Grounding
  - Wrist Straps
  - Conductive Smocks, Gloves and Finger Cots
  - Antistatic ID Badges
- Protective Workstation
  - Dissipative Table Top
  - Protective Test Equipment (Properly Grounded)
  - Grounded Tip Soldering Irons
  - Solder Conductive Suckers
  - Static Sensors
- Facility
  - Relative Humidity Control and Air Ionizers
  - Dissipative Floors (less than 10^9 Ω to GND)
- Protective Packaging and Transportation
  - Bags and Pouches (Faraday Shield)
  - Protective Tote Boxes (Conductive Static Shielding)
  - Protective Trays
  - Grounded Carts
  - Protective Work Order Holders

Ordering Information

Model Number	Manufacturing Part Number	Product Revision	Package	Operating Temperature
SKY77181	SKY77181		MCM3x3LM	–20 °C to 85 °C

Revision History

Revision	Level	Date	Description
A		January 7, 2008	Initial Issue – Preliminary Information

References

Application Note: PCB Design and SMTP Assembly/Rework, Document Number 101752

Application Note: Tape and Reel Information – RF Modules, Document Number 101568

Standard SMTP Reflow Profiles: JEDEC Standard J–STD–020