- FM/Communication applications
- RoHS Compliant (Note 7 exemption)

L10.7 SERIES

CERAMIC FILTER

The L10.7 Series ceramic filter is for FM use.

OPERATING CONDITIONS / ELECTRICAL CHARACTERISTICS (Operating Temp -20 ~ +80°C)

PART NUMBER *	3 dB BANDWIDTH (KHz) MIN.	20 dB BANDWIDTH (KHz) MAX.	INSERTION LOSS (dB) MAX.	SPURIOUS (dB) MIN. (9-12 MHz)
L10.7 MA20☐	330 ±50	680	4 ±2	30
L10.7 MA5☐	280 ±50	650	6 ±2	30
L10.7 MA5A10☐	280 ±50	590	2.5 ±2	30
L10.7 MS2☐	230 ±50	600	6 ±2	40
L10.7 MS2A10☐	230 ±50	520	3 ±2	35
L10.7 MS3☐	180 ±40	520	7 ±2	40
L10.7 MS3A10☐	180 ±40	520	3 ±2	35
L10.7 MJ☐	150 ±40	400	10 ±2	38
L10.7 MJA10☐	150 ±40	360	4.5 ±2	35
L10.7 MHY☐	110 ±30	350	7 ±2	30

Input/Output impedance 330 Ohms, Fo tolerance ±30 KHz

☐ = Indicator (Fo), Complete part number to include indicator i.e. L10.7MA5C (C=10.73 MHz)

CENTER FREQUENCY INDICATORS

SPECIFICATION (Fo) MHz	10.64	10.67	10.70	10.73	10.76
INDICATOR	D	B	A	C	E

PACKAGE DIMENSIONS (mm)

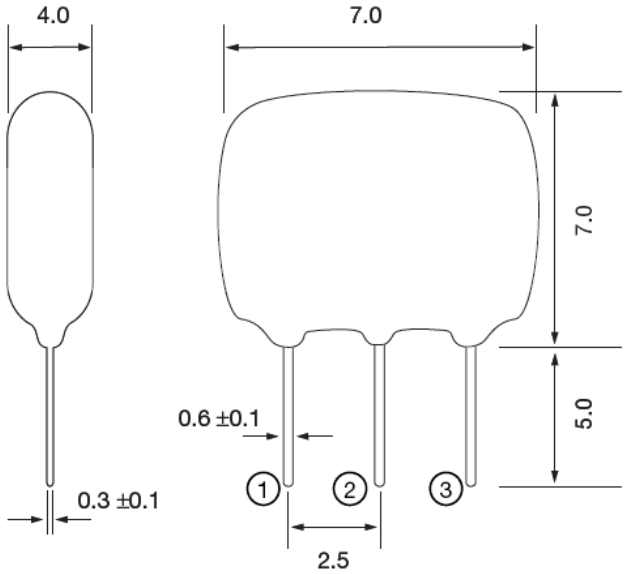

PIN CONNECTIONS	
#1	In/Out
#2	Ground
#3	Out/In

Figure 1) Front and Side Views

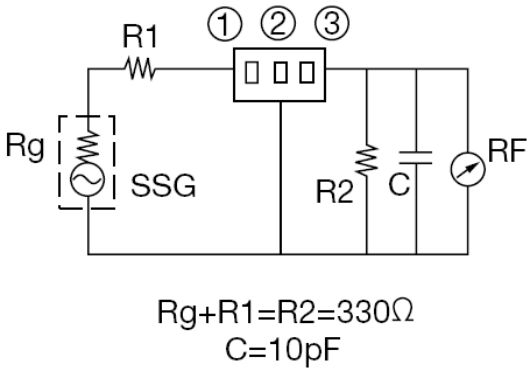

Figure 2) Test Circuit

1105 South Ridgeview Road • Olathe, KS 66062 • Phone: 913.782.7787 • Fax: 913.782.6991 • www.ecsxtal.com