MODEL NUMBER
DS0506

PIN Diode SP6T

FEATURES

- 100 - 600 MHz
- 0.6 dB Insertion Loss
- Handles +25 dBm
- 250 nSec Switching Speed
- Non-Reflective
- TTL Driver
- 38 Pin DIP

SP6T

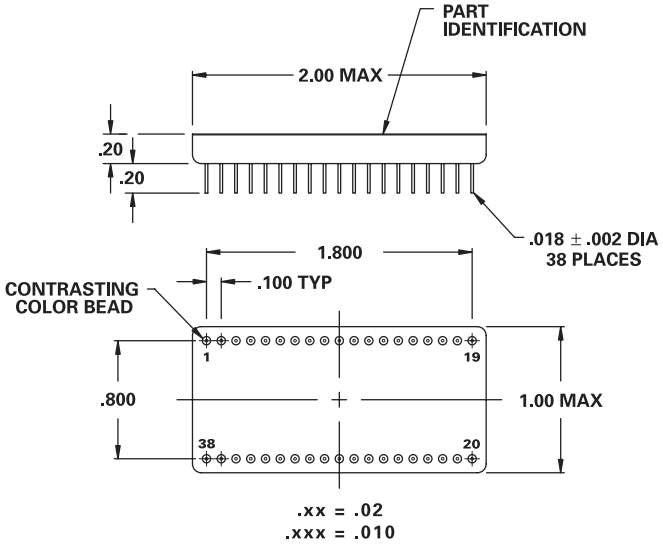

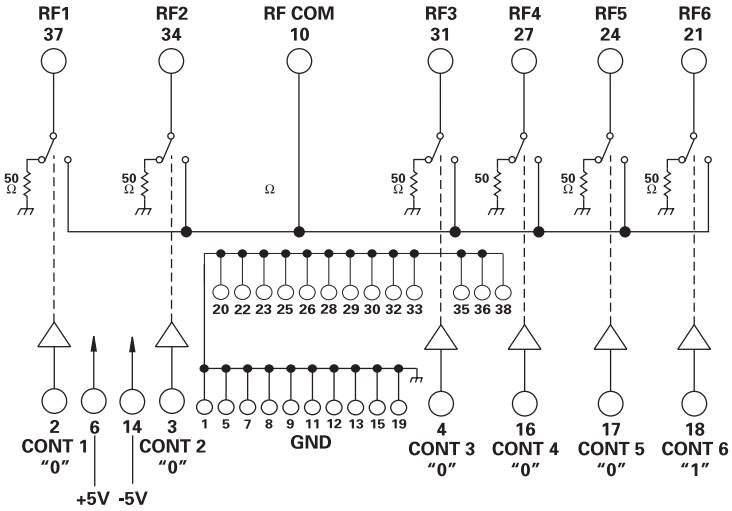

TYPICAL PERFORMANCE
at 25°C

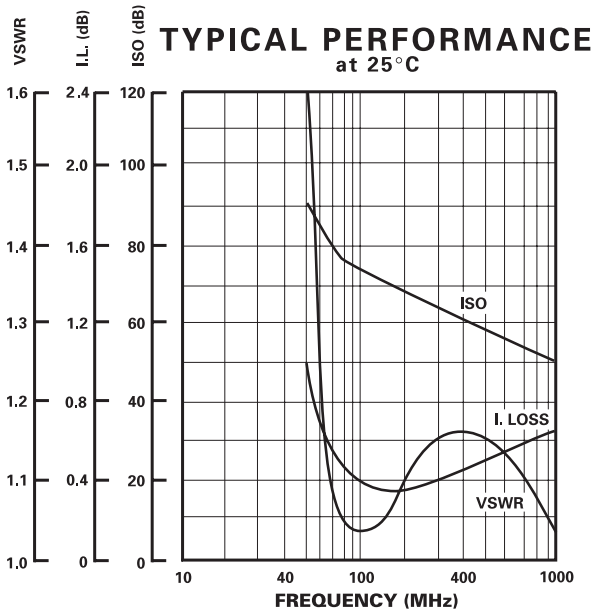

GUARANTEED PERFORMANCE

Parameter		Min	Typ	Max	Units	Conditions
Operating Frequency		100		600	MHz	
DC Current			25	35	mA	At +5 VDC Supply
			30	45	mA	At -5 VDC Supply
Control Type			TTL			6 Line Logic "0" = Off Logic "1" = On
Control Current	*High*			40	µA	VIH = +2.7 V
	Low			-400	µA	VIL = +0.5 V
Insertion Loss			0.6	1.0	dB	
Isolation		50	56		dB	
VSWR			1.2/1	1.50/1		
Impedance			50		OHMS	
Switching Speed			0.25	1	µSEC	50% TTL to 90% / 10% RF
Transition (Rise/Fall) Time			0.1		µSEC	10% / 90% or 90% / 10% RF
Switching (Video) Transients			700		mV	Peak Value
Intercept Points	*2nd*		+90		dBm	60 MHz / 160 MHz
	3rd		+50		dBm	130 MHz / 160 MHz
RF Power	*Operate*		+25	+20	dBm	0.1 dB Compression
	No Damage			+30	dBm	
Operating Temperature		-55	+25	+125	°C	TA