MODEL NUMBER DPS52181

Phase Shifter 5 Section

FEATURES

- 2300-2410 MHz
- High Frequency
- Low Transient
- 38 Pin DIP

5 BIT

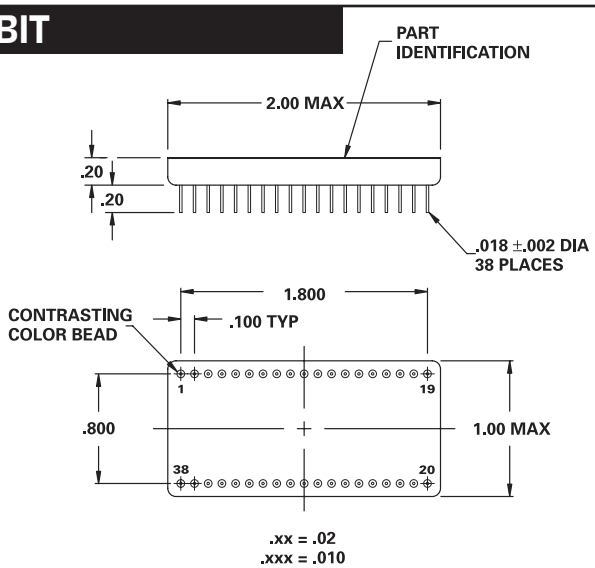

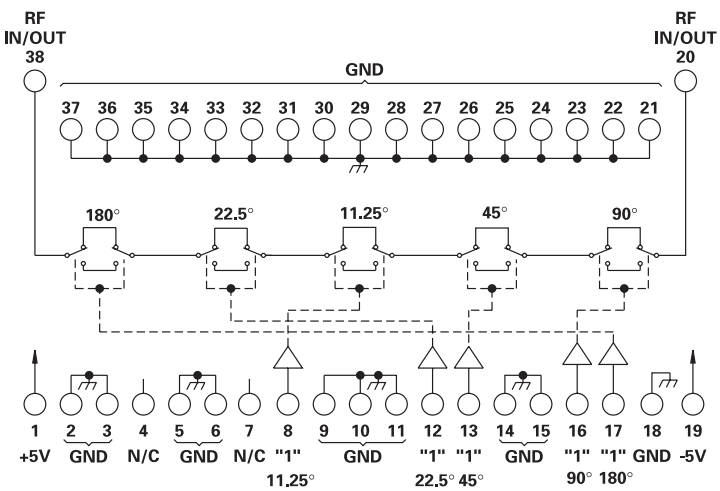

TYPICAL PERFORMANCE

at 25°C

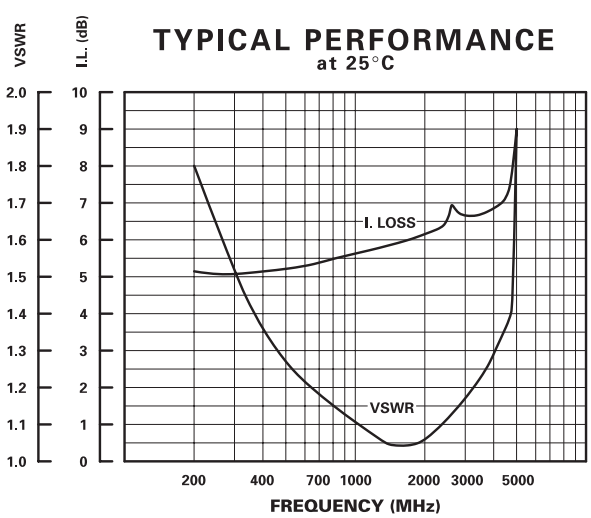

LOGIC TABLE						
CONT	STATE	PIN 8	PIN 12	PIN 13	PIN 16	PIN 17
H	Phase Shift	11.25°	22.5°	45°	90°	180°
L	Thru	"0"	"0"	"0"	"0"	"0"

GUARANTEED PERFORMANCE

Parameter		Min	Typ	Max	Units	Conditions
Operating Frequency		2300		2410	MHz	Fc = 2355
DC Current			2.20	5	mA	At +5 VDC Supply
			0.05	5	mA	At -5 VDC Supply
Control Type			TTL			5 Line
						See Logic Table
Control Current	*High*		±20		µA	At +5 VDC Supply
	Low		±20		µA	
Insertion Loss			6.5	8.0	dB	
Insertion Loss	*Stability-1*		±0.3	±0.5	dB	For All Phase Shifting
Insertion Loss	*Stability-2*		±0.3	±0.5	dB	Same Temp. Freq. & Phase State
						Unit To Unit for Same Lot/Date Code
Insertion Phase Stability			±5	±10	DEG	Same Temp. Freq. & Phase State
						Unit To Unit for Same Lot/Date Code
Phase	*LSB*		11.25		DEG	
	Range	0		348.75	DEG	11.25, 22.5, 45, 90, 180
	Slope					Linear Phase Vs. Frequency
	Accuracy			±5	DEG	Any One Bit
				±10	DEG	Any Combination
VSWR			1.2/1	1.5/1		
Impedance			50		OHMS	
Switching Speed			22	100	nSec	50% TTL to 90% RF or 10% RF
Transition (Rise/Fall) Time			6		nSec	90% / 10% or 10% / 90% RF
Switching (Video) Transients			160		mV	Peak Value
Intercept Points	*2nd*		+69		dBm	2202 MHz / 702 MHz
	3rd		+38		dBm	1101 MHz / 702 MHz
RF Power	*Operate*		+21	+18	dBm	0.1 dB Compression
	No Damage			+27	dBm	
Operating Temperature		-40	+25	+70	°C	TA