INDUSTRIAL GRADE CERAMIC RESONATOR

AWSZT-MS

Pb in ceramic
(exempt per RoHS 2002/95/EC Annex (7))

RoHS Compliant

2.5 x 2.0 x 1.2mm

FEATURES:

- Excellent environmental resistance
- Industrial Grade
- Low resonant impedence
- Reflow capable
- Small size, Lightweight

APPLICATIONS:

- Electric appliances
- Remote controls
- Microprocessor clocks
- Industrial controllers
- Mobile phones, DVD, CD-Rom

STANDARD SPECIFICATIONS:

Part Number (XX.XX denotes frequency in MHz)	Frequency Tolerance at 25°C	Frequency Stability at - 20°C to +80°C	Aging in 10 years	Operating temperature	Res. Imp. (Ω) max
AWSZT-XX.XXMSS 20.00 MHz - 50.00 MHz	**± 0.5%**	**± 0.3%**	**± 0.3%**	**-20° to +80°C**	**40**
AWSZT-XX.XXMSD 20.00 MHz - 50.00 MHz	**± 0.5%**	**± 0.3%** **± 0.5% (- 40C to 85C)**	**± 0.3%**	**-40° to +85°C**	**40**
AWSZT-XX.XXMSA 20.00 MHz - 50.00 MHz	**± 0.5%**	**± 0.3%** **± 0.7% (- 40C to 125C)**	**± 0.3%**	**-40° to +125°C**	**40**
AWSZT-XX.XXMS 8.00 MHz - 13.00 MHz	**± 0.4%**	**± 0.3%**	**± 0.3%**	**-20° to +80°C**	**25**
AWSZT-XX.XXMS 13.01 MHz - 20.00 MHz	**± 0.4%**	**± 0.3%**	**± 0.3%**	**-20° to +80°C**	**40**
AWSZT-XX.XXMS 20.01 MHz - 25.99 MHz	**± 0.4%**	**± 0.3%**	**± 0.3%**	**-20° to +80°C**	**40**
AWSZT-XX.XXMS 26.00 MHz - 50.00 MHz	**± 0.4%**	**± 0.3%**	**± 0.3%**	**-20° to +80°C**	**40**

ITEM	SPECIFICATION
Storage temperature:	- 40°C to +125°C
Insulation resistance:	500Mohms min. at 10Vdc

FREQ (MHz)	C1=C2 pF (±20%)
8.00 ~ 13.00	30
13.01 ~ 20.00	30
20.01 ~ 25.99	15
26.00 ~ 50.00	5

MARKING:

XX.XXZY

XX.XX = (Frequency in MHz)
Z = Month Code; Y = Year Code

OPTIONS AND PART IDENTIFICATION:

(Left blank if standard)

AWSZT - XX.XXMSY - Packaging
XX.XX: Freq in MHz

Y Option:
S,D or A

Packaging option:
T for Tape and Reel (3000pcs/reel)

SUGGESTED REFLOW PROFILE:

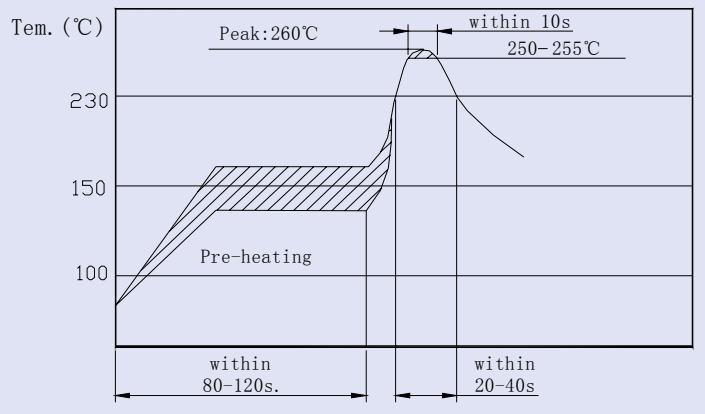

TEST CIRCUIT:

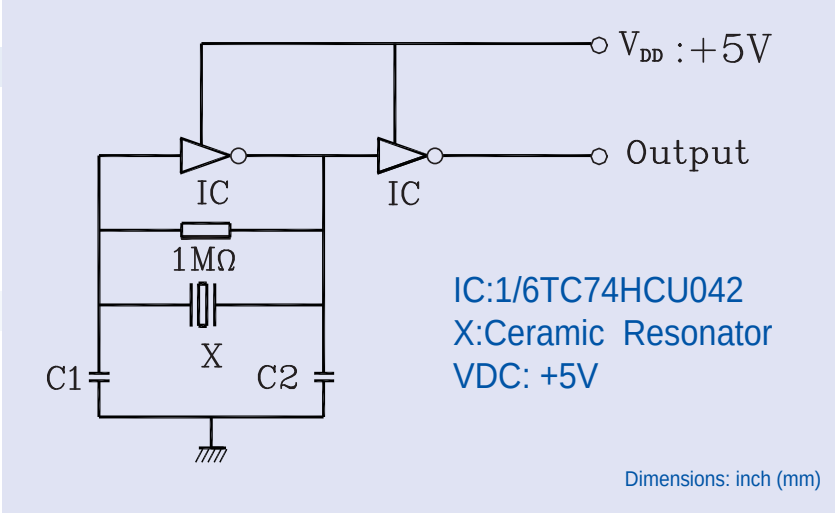

ABRACON IS ISO 9001 / QS 9000 CERTIFIED

ABRACON CORPORATION

Visit www.abracon.com for Terms & Conditions of Sale **Revised: 07.16.07**
30332 Esperanza, Rancho Santa Margarita, California 92688
tel 949-546-8000 | fax 949-546-8001 | www.abracon.com

INDUSTRIAL GRADE CERAMIC RESONATOR

AWSZT-MS

Pb in ceramic
(exempt per RoHS 2002/95/EC Annex (7))

RoHS Compliant

2.5 x 2.0 x 1.2mm

OUTLINE DRAWING:

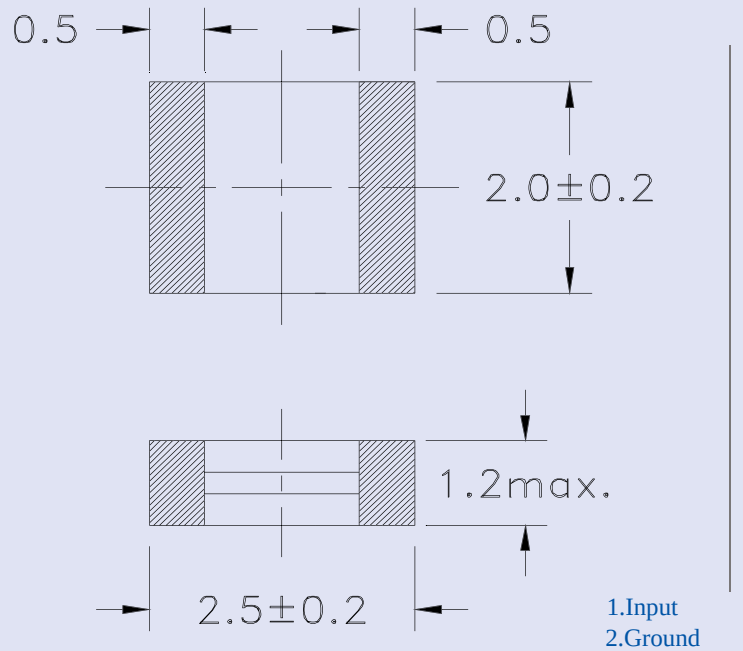

1.Input
2.Ground

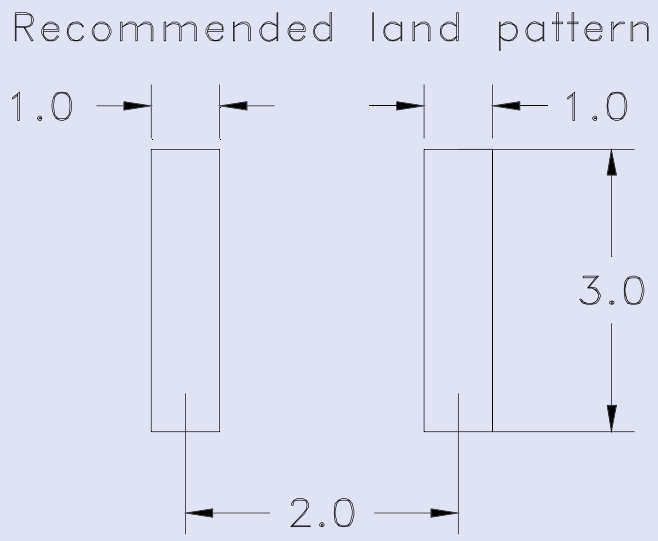

Dimensions: mm

TAPE & REEL: T = Tape and reel 3,000pcs/reel

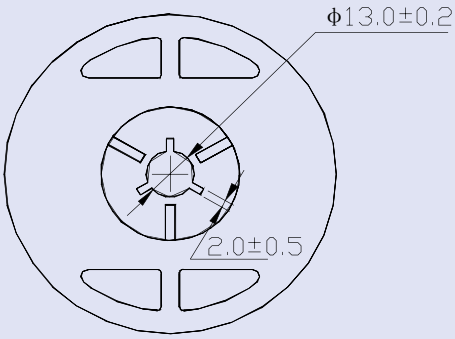

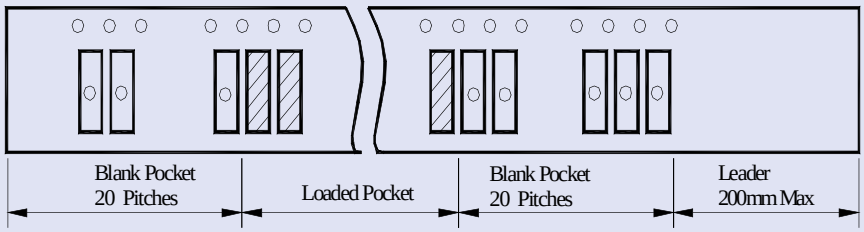

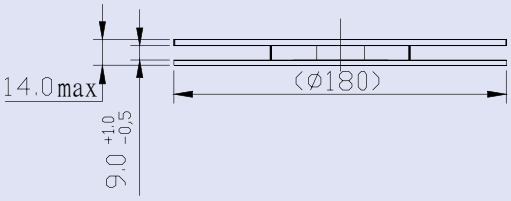

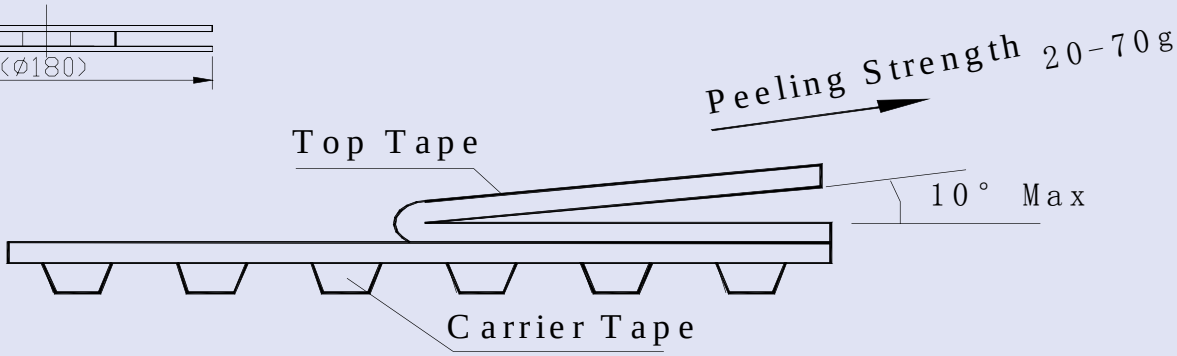

Dimensions: mm

30332 Esperanza, Rancho Santa Margarita, California 92688
tel 949-546-8000 | fax 949-546-8001 | www.abracon.com