| MODEL NUMBER 100C1297 | PIN Diode Transfer Switch |
|---|---|

## FEATURES

- 15 - 1000 MHz
- +36 dBm 3rd Order I.P.
- CMOS Driver
- Non-Reflective
- SMA Connectors

## XFER

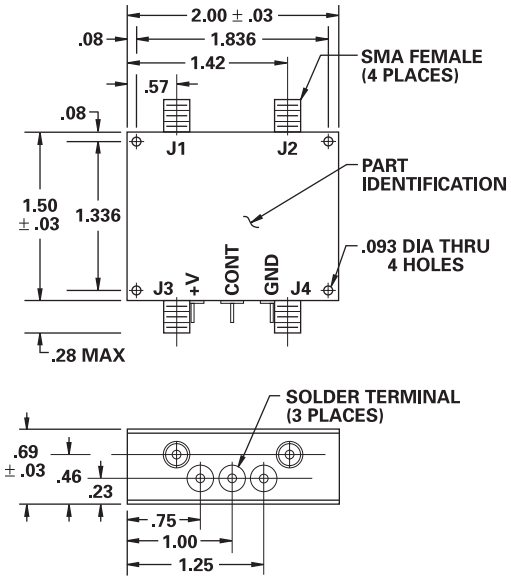


.xx = .02
.xxx = .010

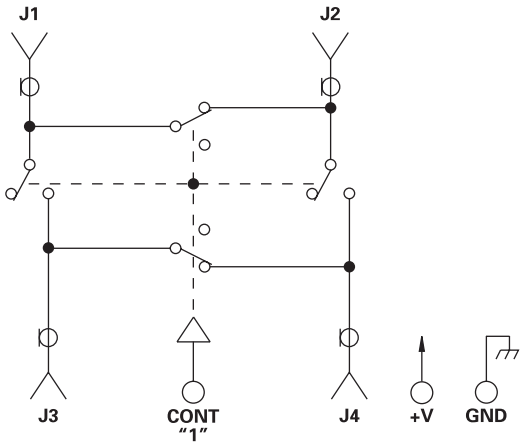


## TYPICAL PERFORMANCE
at 25°C

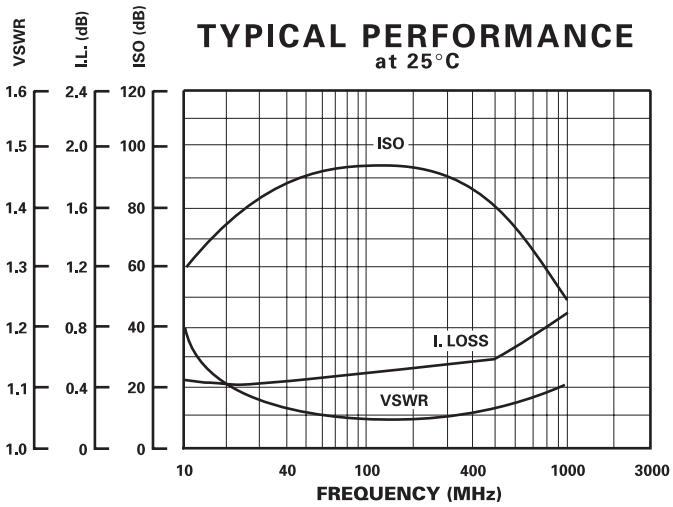


## GUARANTEED PERFORMANCE

| Parameter | Min | Typ | Max | Units | Conditions |
|---|---|---|---|---|---|
| Operating Frequency | 15 | | 1000 | MHz | |
| DC Current | | 20 | | mA | At +10 VDC Supply<br>To +15 VDC Supply |
| Control Type | | CMOS | | | 1 Line<br>Logic "0" = J1 to J3, J2 to J4<br>Logic "1" = J1 to J2, J3 to J4 |
| Control Current *High* | | | ±10 | µA | VIH = +V |
| *Low* | | | ±10 | µA | VIL = +0V |
| Insertion Loss | | 0.5 | 0.7 | dB | 15 - 500 MHz |
| | | 0.9 | 1.2 | dB | 500 - 1000 MHz |
| Isolation | 50 | 70 | | dB | 15 - 100 MHz |
| | 40 | 60 | | dB | 100 - 800 MHz |
| | 35 | 50 | | dB | 800 - 1000 MHz |
| VSWR | | 1.1/1 | 1.25/1 | | 15 - 800 MHz |
| | | 1.15/1 | 1.5/1 | | 800 - 1000 MHz |
| Impedance | | 50 | | OHMS | |
| Switching Speed | | | 20 | µSEC | 50% Control to 90% / 10% RF |
| Intercept Points *3rd* | | +36 | | dBm | 35 MHz / 50 MHz |
| RF Power *Operate* | | | +15 | dBm | 0.1 dB Comp. Above 70 MHz |
| Operating Temperature | -55 | +25 | +85 | °C | TA |