Product Preview

Internally Clamped N-Channel IGBT

MGP20N63CL

This Logic Level Insulated Gate Bipolar Transistor (IGBT) features Gate–Emitter ESD protection, Gate Collector Over–Voltage Protection from monolithic circuitry for usage as an Ignition Coil Driver.

- Temperature Compensated Gate – Collector Clamp Limits Stress Applied to Load
- Integrated ESD Diode Protection
- Low Threshold Voltage to Interface Power Loads to Logic or Microprocessor Devices
- Low Saturation Voltage
- High Pulsed Current Capability

20 AMPERES
N–CHANNEL IGBT
$V_{CE(on)}$ = 1.7 V
630 VOLTS
CLAMPED

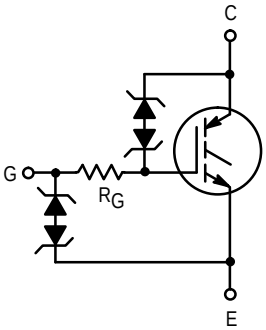

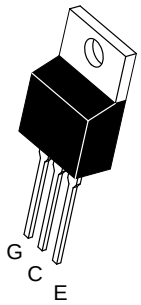

CASE 221A–09
STYLE 9
TO–220AB

MAXIMUM RATINGS (T_J = 25°C unless otherwise noted)

Rating	Symbol	Value	Unit
Collector–Emitter Voltage	V_{CES}	CLAMPED	Vdc
Collector–Gate Voltage	V_{CER}	CLAMPED	Vdc
Gate–Emitter Voltage	V_{GE}	CLAMPED	Vdc
Collector Current — Continuous	I_C	20	Adc
Total Power Dissipation Derate above 25°C	P_D	180 1.4	Watts W/°C
Operating and Storage Temperature Range	T_J, T_{stg}	–55 to 175	°C
UNCLAMPED COLLECTOR–TO–EMITTER AVALANCHE CHARACTERISTICS (T_J < 150°C)			
Single Pulse Collector–to–Emitter Avalanche Energy V_{CC} = 50 V, V_{GE} = 5.0 V, PEAK I_L = 14.2 A, L = 3.0 mH, Starting T_J = 25°C V_{CC} = 50 V, V_{GE} = 5.0 V, PEAK I_L = 10 A, L = 3.0 mH, Starting T_J = 150°C	E_{AS}	 650 350	mJ
THERMAL CHARACTERISTICS			
Thermal Resistance — Junction–to–Case — Junction–to–Ambient	$R_{\theta JC}$ $R_{\theta JA}$	0.8 40	°C/W
Maximum Lead Temperature for Soldering Purposes, 1/8″ from case for 5 seconds	T_L	260	°C

This document contains information on a new product. Specifications and information herein are subject to change without notice.

ELECTRICAL CHARACTERISTICS (T_J = 25°C unless otherwise noted)

Characteristic	Symbol	Min	Typ	Max	Unit
OFF CHARACTERISTICS					
Collector–Emitter Clamp Voltage (I_C = 1.0 mA, T_J = –40°C to 175°C)	$V_{(BR)CES}$	—	630	—	Vdc
Zero Gate Voltage Collector Current (V_{CE} = 500 V, V_{GE} = 0 V) (V_{CE} = 500 V, V_{GE} = 0 V, T_J = 150°C)	I_{CES}	— —	— —	100 2000	μAdc
Gate–Emitter Clamp Voltage (I_G = 5.0 mA)	$V_{(BR)GES}$	17	—	22	Vdc
Gate–Emitter Leakage Current (V_{GE} = 10 V)	I_{GES}	—	—	20	μAdc
Gate–Resistor	R_G	—	400	—	Ω
ON CHARACTERISTICS (1)					
Gate Threshold Voltage (V_{GE} = V_{CE}, I_C = 1.0 mA) Threshold Temperature Coefficient (Negative)	$V_{GE(th)}$	— —	1.7 4.4	— —	Vdc mV/°C
Collector–to–Emitter On–Voltage (V_{GE} = 3.5 V, I_C = 6.0 A) (V_{GE} = 4.0 V, I_C = 10 A, T_J = 150°C)	$V_{CE(on)}$	— —	1.6 1.7	— —	Volts
Forward Transconductance (V_{CE} = 5.0 V, I_C = 10 A)	g_{fe}	—	20	—	Mhos
DYNAMIC CHARACTERISTICS					
Input Capacitance	(V_{CC} = 15 V, V_{GE} = 0 V, f = 1.0 MHz)	C_{ies}	—	TBD	—	pF
Output Capacitance		C_{oes}	—	TBD	—	
Transfer Capacitance		C_{res}	—	TBD	—	
SWITCHING CHARACTERISTICS (1)					
Turn–Off Delay Time	(V_{CC} = 600 V, I_C = 10 A, R_G = 1.0 kΩ, L = 300 μH)	$t_{d(off)}$	—	TBD	—	μSec
Fall Time		t_f	—	TBD	—	
Turn–On Delay Time	(V_{CC} = 10 V, I_C = 10 A, R_G = 1.0 kΩ, R_L = 1.0 Ω)	$t_{d(on)}$	—	TBD	—	μSec
Rise Time		t_r	—	TBD	—	
Gate Charge		Q_T	—	TBD	—	nC
		Q_1	—	TBD	—	
		Q_2	—	TBD	—	

(1) Pulse Test: Pulse Width ≤ 300 μS, Duty Cycle ≤ 2%.

PACKAGE DIMENSIONS

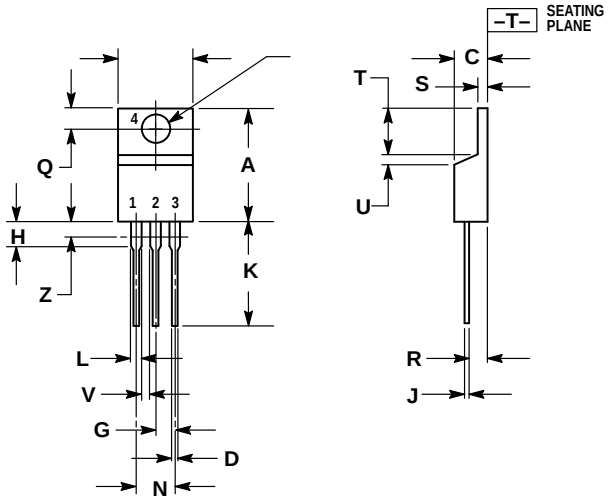

STYLE 9:
PIN 1. GATE
2. COLLECTOR
3. EMITTER
4. COLLECTOR

NOTES:
1. DIMENSIONING AND TOLERANCING PER ANSI Y14.5M, 1982.
2. CONTROLLING DIMENSION: INCH.
3. DIMENSION Z DEFINES A ZONE WHERE ALL BODY AND LEAD IRREGULARITIES ARE ALLOWED.

	INCHES		MILLIMETERS	
DIM	MIN	MAX	MIN	MAX
A	0.570	0.620	14.48	15.75
B	0.380	0.405	9.66	10.28
C	0.160	0.190	4.07	4.82
D	0.025	0.035	0.64	0.88
F	0.142	0.147	3.61	3.73
G	0.095	0.105	2.42	2.66
H	0.110	0.155	2.80	3.93
J	0.018	0.025	0.46	0.64
K	0.500	0.562	12.70	14.27
L	0.045	0.060	1.15	1.52
N	0.190	0.210	4.83	5.33
Q	0.100	0.120	2.54	3.04
R	0.080	0.110	2.04	2.79
S	0.045	0.055	1.15	1.39
T	0.235	0.255	5.97	6.47
U	0.000	0.050	0.00	1.27
V	0.045	—	1.15	—
Z	—	0.080	—	2.04

CASE 221A–09
ISSUE Z

How to reach us:

USA / EUROPE / Locations Not Listed: Motorola Literature Distribution;
P.O. Box 5405, Denver, Colorado 80217. 1–303–675–2140 or 1–800–441–2447

JAPAN: Nippon Motorola Ltd.: SPD, Strategic Planning Office, 141,
4–32–1 Nishi–Gotanda, Shagawa–ku, Tokyo, Japan. 03–5487–8488

Customer Focus Center: 1–800–521–6274

Mfax™: RMFAX0@email.sps.mot.com – TOUCHTONE 1–602–244–6609
Motorola Fax Back System – US & Canada ONLY 1–800–774–1848
– http://sps.motorola.com/mfax/

HOME PAGE: http://motorola.com/sps/

ASIA / PACIFIC: Motorola Semiconductors H.K. Ltd.; 8B Tai Ping Industrial Park,
51 Ting Kok Road, Tai Po, N.T., Hong Kong. 852–26629298