Order this document
by T2800/D

Triacs

Bidirectional Triode Thyristors

. . . designed primarily for full-wave ac control applications, such as light dimmers, motor controls, heating controls and power supplies.

- Blocking Voltage to 600 Volts
- All Diffused and Glass Passivated Junctions for Greater Parameter Uniformity and Stability
- Small, Rugged, Thermowatt Construction for Low Thermal Resistance, High Heat Dissipation and Durability
- T2800 — Four Quadrant Gating

T2800 SERIES

TRIACs
8 AMPERES RMS
400 thru 600 VOLTS

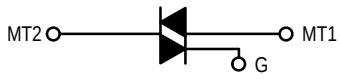

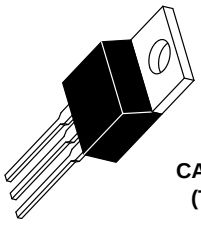

CASE 221A-07
(TO-220AB)
STYLE 4

MAXIMUM RATINGS (T_J = 25°C unless otherwise noted.)

Rating	Symbol	Value	Unit
Peak Repetitive Off-State Voltage(1) (T_J = –40 to +100°C, Gate Open) T2800 D M	V_{DRM}	 400 600	Volts
RMS On-State Current (T_C = +80°C) (Conduction Angle = 360°)	$I_{T(RMS)}$	8	Amps
Peak Non-repetitive Surge Current (One Full Cycle, 60 Hz, T_J = +80°C)	I_{TSM}	100	Amps
Circuit Fusing (t = 8.3 ms)	I^2t	40	A^2s
Peak Gate Power (Pulse Width = 1 µs)	P_{GM}	16	Watts
Average Gate Power	$P_{G(AV)}$	0.35	Watt
Peak Gate Trigger Current (Pulse Width = 1 µs)	I_{GTM}	4	Amps
Operating Junction Temperature Range	T_J	–40 to +100	°C
Storage Temperature Range	T_{stg}	–40 to +150	°C

THERMAL CHARACTERISTICS

Characteristic	Symbol	Max	Unit
Thermal Resistance, Junction to Case	$R_{\theta JC}$	2.2	°C/W

1. V_{DRM} for all types can be applied on a continuous basis. Blocking voltages shall not be tested with a constant current source such that the voltage ratings of the devices are exceeded.

REV 2

ELECTRICAL CHARACTERISTICS (T_C = 25°C unless otherwise noted.)

Characteristic	Symbol	Min	Typ	Max	Unit
Peak Blocking Current (V_D = Rated V_{DRM}, Gate Open) T_C = 25°C T_C = 100°C	I_{DRM}	 — —	 — —	 10 2	 µA mA
Peak On-State Voltage (Either Direction)* (I_T = 30 A Peak)	V_{TM}	—	1.7	2	Volts
Gate Trigger Current (Continuous dc) (V_D = 12 Vdc, R_L = 12 Ohms) MT2(+), G(+) T2800 MT2(+), G(–) T2800 MT2(–), G(–) T2800 MT2(–), G(+) T2800	I_{GT}	 — — — —	 10 20 15 30	 25 60 25 60	mA
Gate Trigger Voltage (Continuous dc) (All Polarities) (V_D = 12 Vdc, R_L = 100 Ohms) (R_L = 125 Ohms, V_D = V_{DRM}, T_C = 100°C)	V_{GT}	 — 0.2	 1.25 —	 2.5 —	Volts
Holding Current (Either Direction) (V_D = 12 Vdc, Gate Open) T2800	I_H	 —	 15	 30	mA
Gate Controlled Turn-On Time (V_D = Rated V_{DRM}, I_T = 10 A, I_{GT} = 80 mA, Rise Time = 0.1 µs)	t_{gt}	—	1.6	—	µs
Critical Rate-of-Rise of Commutation Voltage (V_D = Rated V_{DRM}, $I_{T(RMS)}$ = 8 A, Commutating di/dt = 4.1 A/ms, Gate Unenergized, T_C = 80°C)	dv/dt(c)	—	10	—	V/µs
Critical Rate-of-Rise of Off-State Voltage (V_D = Rated V_{DRM}, Exponential Voltage Rise, Gate Open, T_C = 100°C) T2800 D M	dv/dt	 — 60	 — —	 — —	V/µs

*Pulse Test: Pulse Width ≤ 300 µs, Duty Cycle ≤ 2%.

FIGURE 1 – CURRENT DERATING

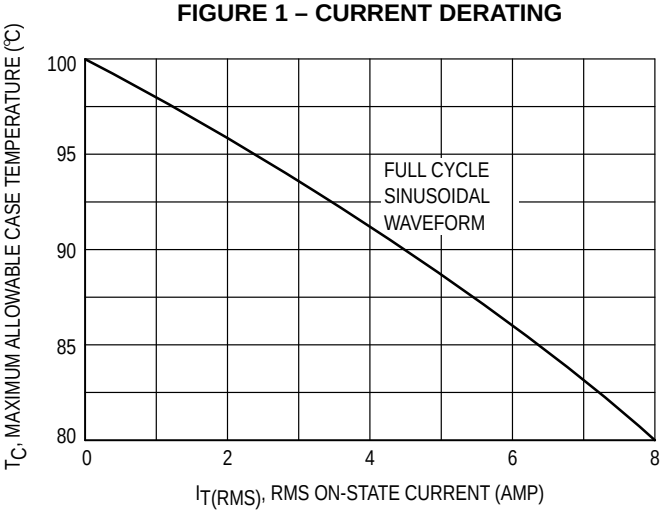

FIGURE 2 – POWER DISSIPATION

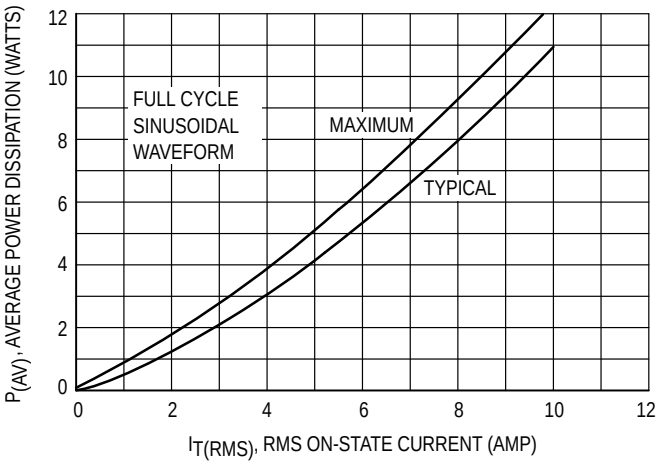

PACKAGE DIMENSIONS

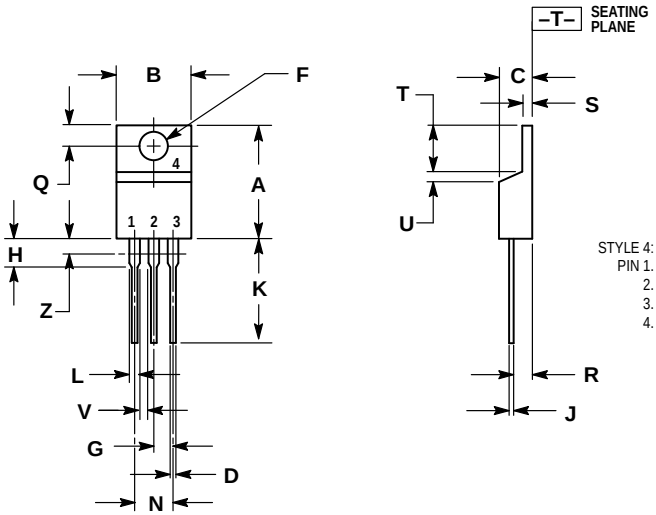

STYLE 4:
PIN 1. MAIN TERMINAL 1
2. MAIN TERMINAL 2
3. GATE
4. MAIN TERMINAL 2

NOTES:
1. DIMENSIONING AND TOLERANCING PER ANSI Y14.5M, 1982.
2. CONTROLLING DIMENSION: INCH.
3. DIMENSION Z DEFINES A ZONE WHERE ALL BODY AND LEAD IRREGULARITIES ARE ALLOWED.

	INCHES		MILLIMETERS	
DIM	MIN	MAX	MIN	MAX
A	0.570	0.620	14.48	15.75
B	0.380	0.405	9.66	10.28
C	0.160	0.190	4.07	4.82
D	0.025	0.035	0.64	0.88
F	0.142	0.147	3.61	3.73
G	0.095	0.105	2.42	2.66
H	0.110	0.155	2.80	3.93
J	0.014	0.022	0.36	0.55
K	0.500	0.562	12.70	14.27
L	0.045	0.060	1.15	1.52
N	0.190	0.210	4.83	5.33
Q	0.100	0.120	2.54	3.04
R	0.080	0.110	2.04	2.79
S	0.045	0.055	1.15	1.39
T	0.235	0.255	5.97	6.47
U	0.000	0.050	0.00	1.27
V	0.045	—	1.15	—
Z	—	0.080	—	2.04

CASE 221A-07
(TO–220AB)
ISSUE Z

How to reach us:

USA / EUROPE / Locations Not Listed: Motorola Literature Distribution;
P.O. Box 5405, Denver, Colorado 80217. 1–303–675–2140 or 1–800–441–2447

JAPAN: Motorola Japan Ltd.; SPD, Strategic Planning Office, 141,
4–32–1 Nishi–Gotanda, Shinagawa–ku, Tokyo, Japan. 81–3–5487–8488

Customer Focus Center: 1–800–521–6274

Mfax™: RMFAX0@email.sps.mot.com – TOUCHTONE 1–602–244–6609
Motorola Fax Back System – US & Canada ONLY 1–800–774–1848
– http://sps.motorola.com/mfax/

HOME PAGE: http://motorola.com/sps/

ASIA / PACIFIC: Motorola Semiconductors H.K. Ltd.; Silicon Harbour Centre,
2, Dai King Street, Tai Po Industrial Estate, Tai Po, N.T., Hong Kong.
852–26629298